Innovation in Motion

Franke

Wire race bearing **Slim bearing**

Slewing ring **Bearing assemblies**

Standard program

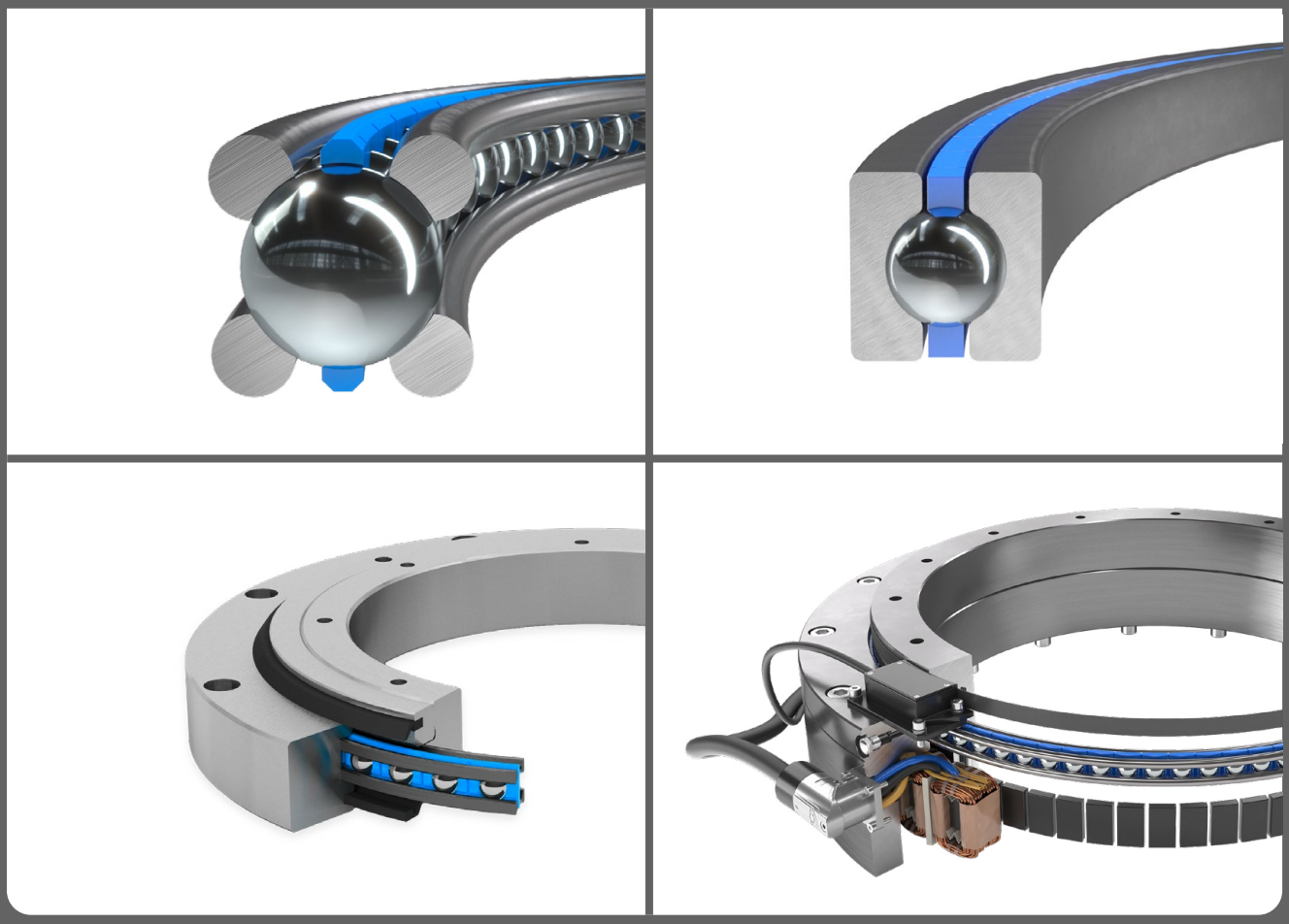

Four wires for better design

The decisive difference between an ordinary ball bearing and a Franke wire race bearing is in the raceways. In a wire race bearing, the rolling elements do not roll on solid housing rings, but on high performance wires. The flexibility of this principle makes it possible to design more freely and simply, in order to develop better products.

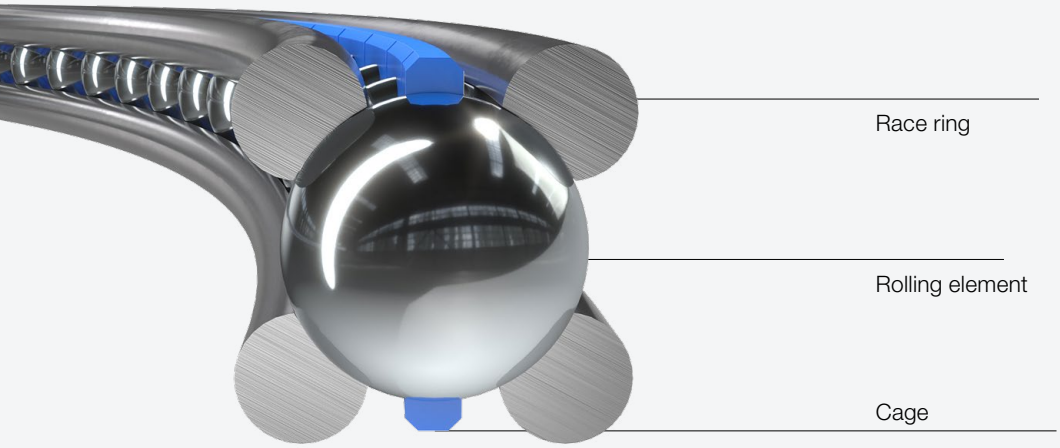

In a wire race bearing, highly resilient bearing rings made of wire assume the function of the bearing arrangement. This saves weight and space. The free choice of material and the free design of the enclosing structure also allow the weight of the overall product to be reduced considerably.

In wire race bearings, the raceways of the rolling elements are precisely matched to the diameter of the rolling elements. This ensures optimum functional characteristics and guarantees both, precise running and a long operating life.

Anything you wish.
Only what you need.

You can purchase from Franke only the wire race bearings or ready-to-install slewing rings. On request in customer-specific design, with toothing or with integrated torque motor.

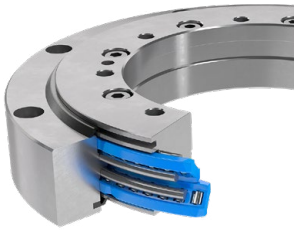

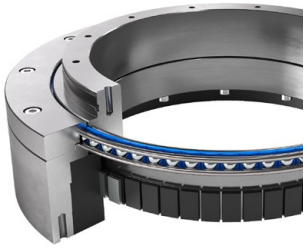

Wire Race Bearings

All you need for your rotational movement is a Franke wire race bearing. Franke wire race bearings can be integrated directly into your design. You can easily assemble them yourself. The wire race bearing can be adapted in form and material bespoke to your requirements, for example by choosing amagnetic ceramic rolling elements.

Slewing rings

If required, we can also design and manufacture complete slewing rings for you. These can be mounted even more easily than bearing elements. Franke slewing rings are available in every size, with individual bores and toothings and in numerous materials such as aluminium, stainless steel, carbon or as a 3D printed housing.

Rotary Tables / Franke Torque

You prefer a complete solution from one source? Franke offers complete customized positio-ning and drive units, optionally with proximity switch, coupling and motor. Systems with direct drive are a particular strength of Franke. They are used, for example, in many computer tomographs of renowned manufacturers.

Super Individual Solutions

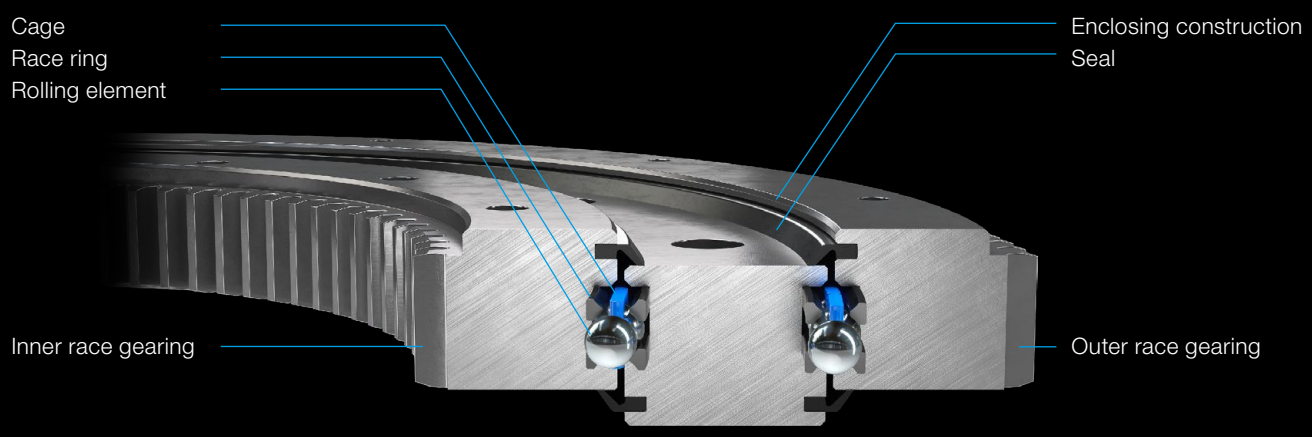

Rolling element

Ball Roller Special designs

Raceways

Round profile Rectangular profile Slim bearings Roller bearing 4-point contact bearing 2-row angular contact ball bearing

Standard cages

Ball cage Roller cage

Special designs

Flat cage Comb cage Steel / Teflon / Brass / ...

Types of gearing

Straight Gear Toothed Belt Gear Helical Gear Special Gear

configure

A New Approach to Wire Race Bearings: The Franke Modular System
The Franke Modular System provides you with an overview of the numerous customization options available when using a Franke wire race bearing.

You're sure to find a solution here that's tailored specifically to your application.

www.franke-gmbh.com

Learn more on our website
The Franke website is the best source of information about Franke products and the company itself.

calculate

Calculate Load Cases Online: Calculation Tool
Using the calculation tool, you can determine the expected service life online and make a preliminary selection for your application. You can easily calculate the load case for the selected wire race bearing or linear system for your specific application.

Instant offer

Instant Download Instead of Waiting in Line
With our "MyFranke" customer portal, you can generate binding quotes for our online product range yourself in a matter of seconds. This speeds up your procurement process—from pricing to ordering.

order

Ordering Through Our Website
Select the right product or solution and conveniently submit your order through our website. For custom requirements, we'll provide personalized advice and prepare a tailored quote.

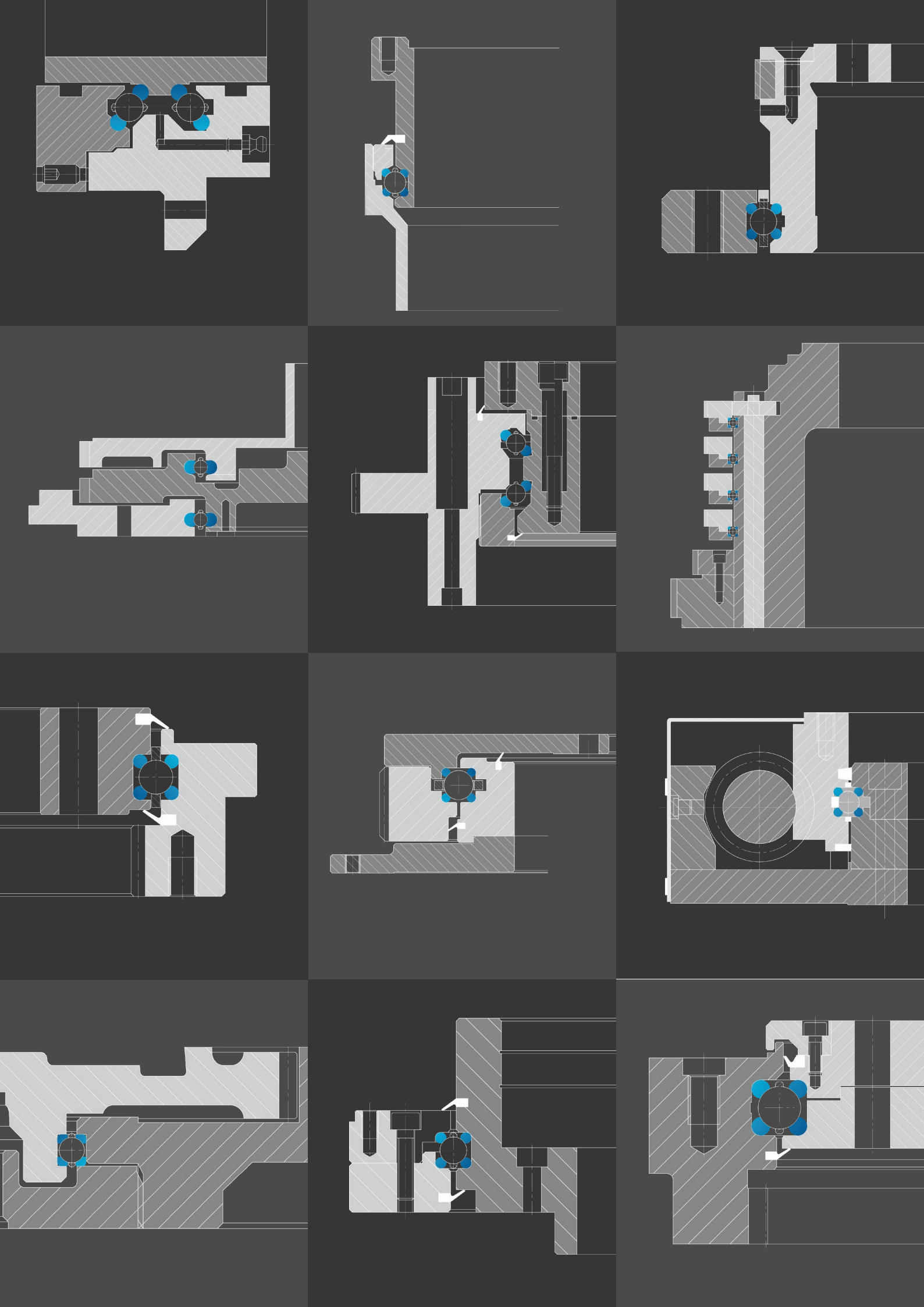

Possibilities instead of specifications

Franke wire race bearings are space-saving, variable and individually adaptable. This gives you the greatest possible freedom for innovative solutions.

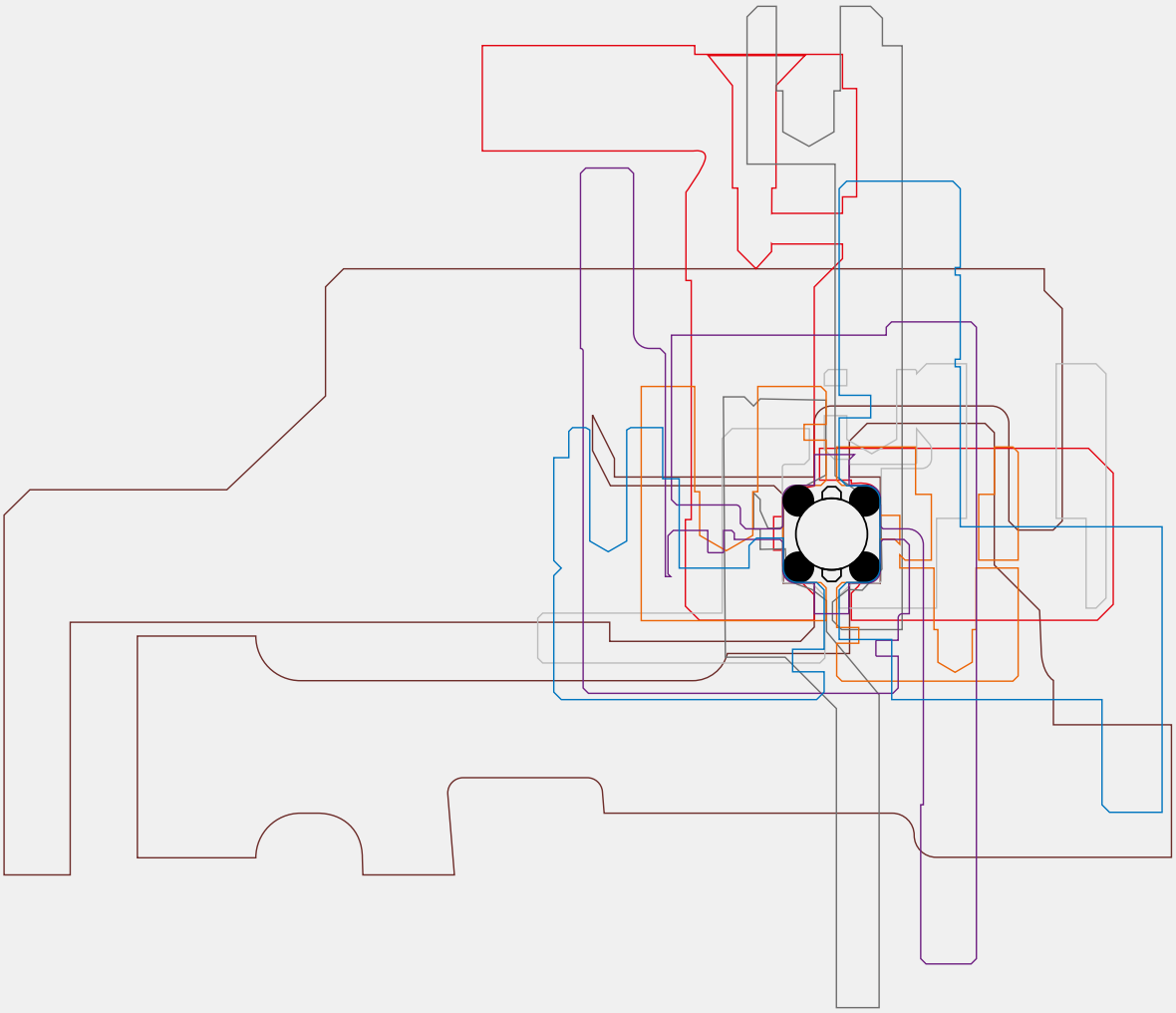

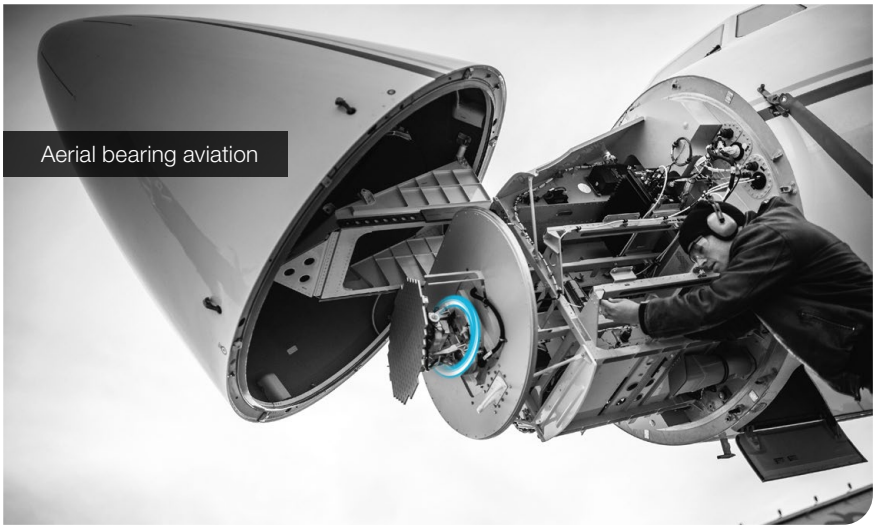
Aerial bearing aviation

Satellite Antenna on Vessels

Mobile Satellite Antenna

Aerial camera

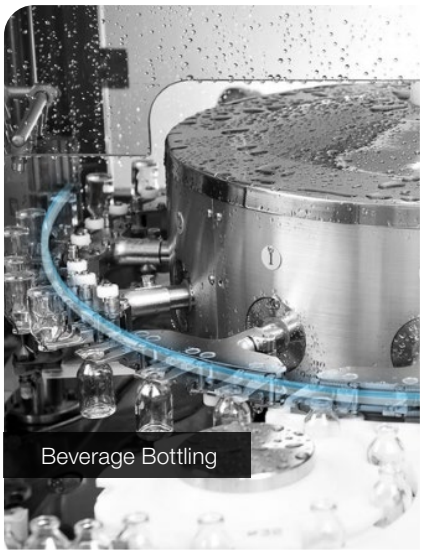
Beverage Bottling

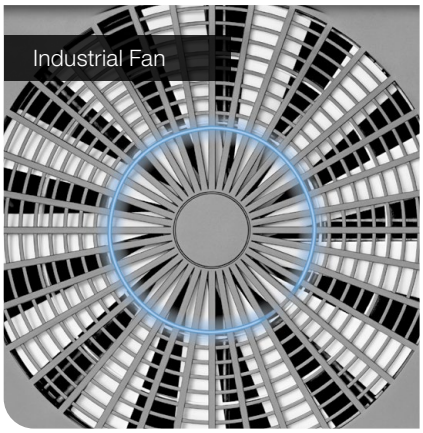
Industrial Fan

Baggage Scanner

Computer tomograph

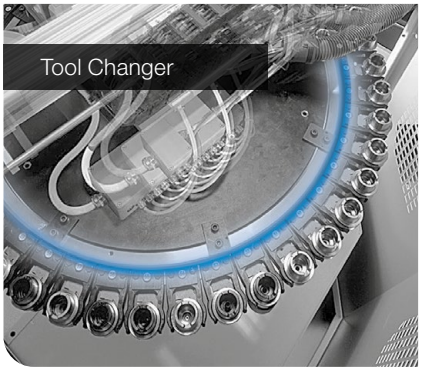

Tool Changer

For all industries

Franke wire race bearings are used in numerous industries, because they can be individually designed and guarantee maximum design freedom.

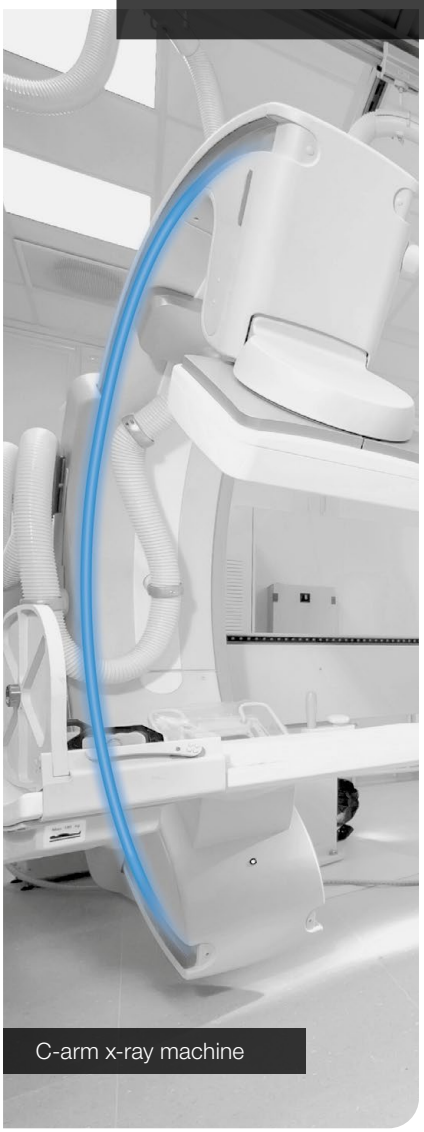

C-arm x-ray machine

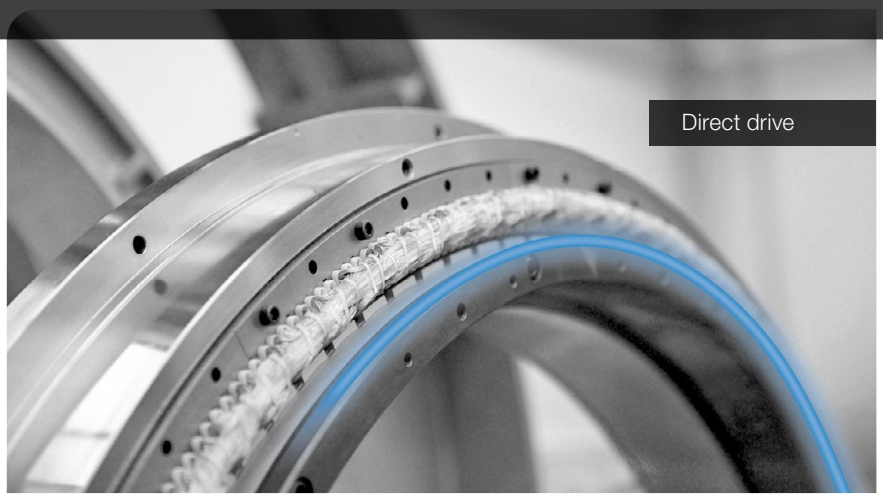

Direct drive

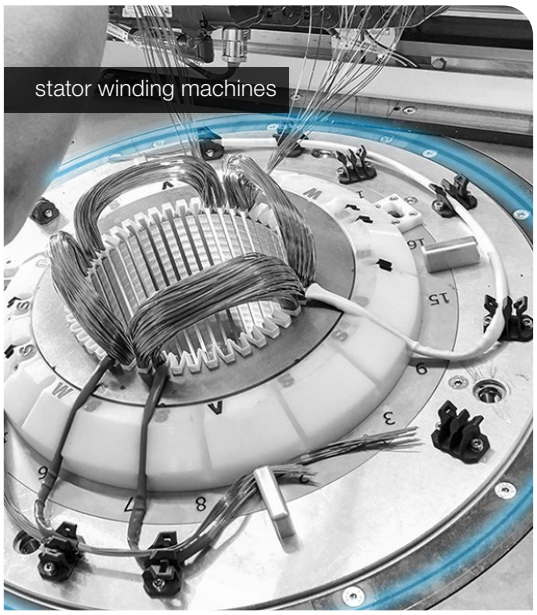

stator winding machines

Swivel station placement machine

Contents

Ball bearing type LEL 1.5 11
Ball bearing type LEL 2.5 14
Ball bearing type LEL 4 17
Ball bearing type LEL 5 22
Ball bearing type LEL 7 27
Ball bearing type LER 1.5 32
Ball bearing type LER 2 35
Ball bearing type LER 3 38
Ball bearing type LER 4 42
Ball bearing type LER 5 46
Roller bearing type LEW 4 50
Roller bearing type LEW 7 53
Slim bearing type LSA 4 56
Slim bearing type LSA 6 59
Slim bearing type LSA 8 62
Ball bearing type LVA 66
Ball bearing type LVB 70
Angular contact ball bearing type LVC 74
Ball bearing type LVD 78
Ball bearing type LVE 82
Angular contact roller bearing type LVG 86
Roller bearing type LVW 89
Rotary table type LTA 92
Rotary table type LTB 95
Direct drive Type LTD 98
Cages 102
Washers 103
Seals 104

Innovation in Motion

Franke

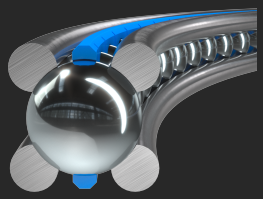

Bearing with ground raceways
Ball bearing type LEL 1.5

Description

Franke wire race bearings of type LEL are suitable for high demands on running characteristics and accuracy. Due to the hardened and CNC-ground raceway as well as the ideal geometrical adaptation of ball and raceway radius, they have outstanding bearing characteristics.
Wire race bearings of type LEL allow the greatest possible freedom of bearing design. The mounting space is between 5.9 mm and 20.9 mm. For special requirements, raceway thicknesses up to 20 mm and ball sizes up to 50 mm are possible.

Characteristics

Smooth running	●●●●●
Accuracy	●●●●●
Speed	●●●●●
Stiffness	●●●●
Assembly	●●●
Price	●●●

Technical Data

Material

Ball race rings: hardened and tempered chrome-silicon steel
Rolling element: hardened rolling bearing steel
Cage: polyamide or thermoplastic polyurethane

Operating temperature

–30 °C to +80 °C, briefly up to +100 °C

Peripheral speed

Max. 5 m/s, without seals max. 10 m/s

Lubricant

Klüber Isoflex Topas NCA52 (recommended)

Bearing with ground raceways
Ball bearing type LEL 1.5

Dimensions and Data Tables

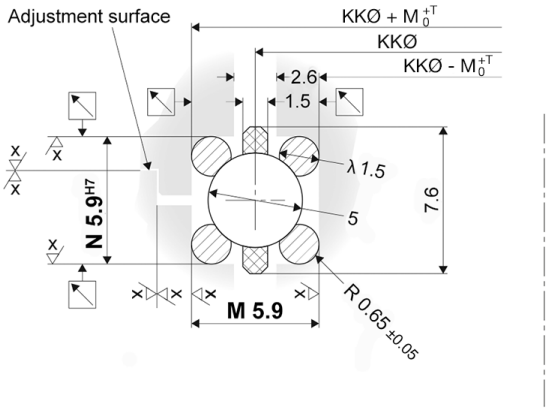

T = KKØ / 10000 [mm]

		Load Ratings kN				Static Moment kNm	
Name	KKØ mm	C_{0a}	C_{0r}	C_a	C_r	C_{0m}	Weight kg
LEL1.5-0070	70	14	6	8	7	0,2	0,03
LEL1.5-0080	80	16	7	8	7	0,3	0,03
LEL1.5-0090	90	18	8	8	7	0,4	0,04
LEL1.5-0100	100	19	9	9	8	0,5	0,04
LEL1.5-0110	110	21	10	9	8	0,6	0,04
LEL1.5-0120	120	23	11	9	8	0,7	0,05
LEL1.5-0130	130	26	12	10	8	0,8	0,05
LEL1.5-0140	140	28	13	10	9	0,9	0,06
LEL1.5-0150	150	30	14	10	9	1,0	0,06

Bearing with ground raceways
Ball bearing type LEL 1.5

Rotational resistance

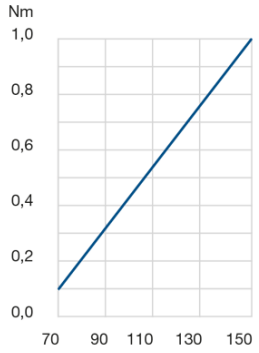

Radial and axial runout accuracy

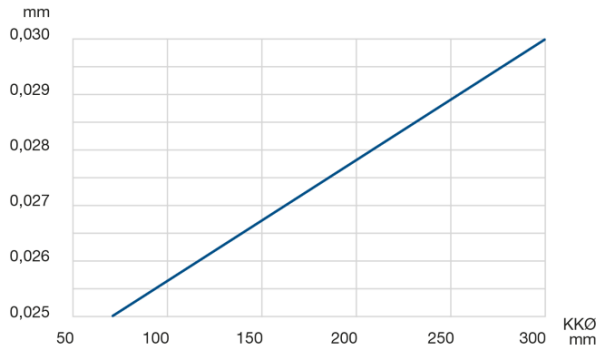

Innovation in Motion

Franke

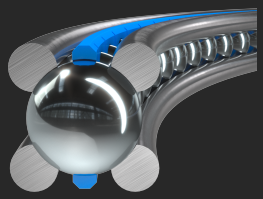

Bearing with ground raceways
Ball bearing type LEL 2.5

Description

Franke wire race bearings of type LEL are suitable for high demands on running characteristics and accuracy. Due to the hardened and CNC-ground raceway as well as the ideal geometrical adaptation of ball and raceway radius, they have outstanding bearing characteristics.
Wire race bearings of type LEL allow the greatest possible freedom of bearing design. The mounting space is between 5.9 mm and 20.9 mm. For special requirements, raceway thicknesses up to 20 mm and ball sizes up to 50 mm are possible.

Characteristics

Smooth running	●●●●●
Accuracy	●●●●●
Speed	●●●●●
Stiffness	●●●●
Assembly	●●●
Price	●●●

Technical Data

Material

Ball race rings: hardened and tempered chrome-silicon steel
Rolling element: hardened rolling bearing steel
Cage: polyamide or thermoplastic polyurethane

Operating temperature

–30 °C to +80 °C, briefly up to +100 °C

Peripheral speed

Max. 5 m/s, without seals max. 10 m/s

Lubricant

Klüber Isoflex Topas NCA52 (recommended)

Bearing with ground raceways
Ball bearing type LEL 2.5

Dimensions and Data Tables

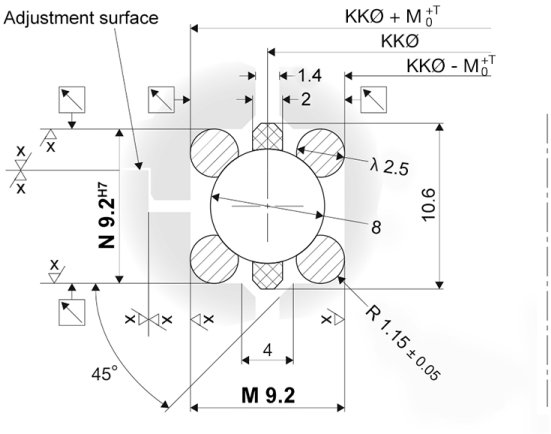

T = KKØ / 10000 [mm]

		Load Ratings kN				Static Moment kNm	
Name	KKØ mm	C_{0a}	C_{0r}	C_a	C_r	C_{0m}	Weight kg
LEL2.5-0160	160	73	35	20	17	2,8	0,15
LEL2.5-0170	170	79	37	20	17	3,2	0,16
LEL2.5-0180	180	83	39	20	18	3,5	0,17
LEL2.5-0190	190	88	41	21	18	3,9	0,18
LEL2.5-0200	200	93	44	22	19	4,4	0,19
LEL2.5-0210	210	97	46	22	19	4,8	0,20
LEL2.5-0220	220	103	48	22	19	5,3	0,21
LEL2.5-0230	230	106	50	23	19	5,7	0,22
LEL2.5-0240	240	112	52	23	20	6,3	0,23
LEL2.5-0250	250	117	55	23	20	6,9	0,24
LEL2.5-0260	260	121	57	24	20	7,4	0,25
LEL2.5-0270	270	126	59	24	21	8,0	0,26
LEL2.5-0280	280	132	62	24	21	8,7	0,27
LEL2.5-0290	290	135	64	25	21	9,2	0,28
LEL2.5-0300	300	141	66	25	22	9,9	0,29

Bearing with ground raceways
Ball bearing type LEL 2.5

Rotational resistance

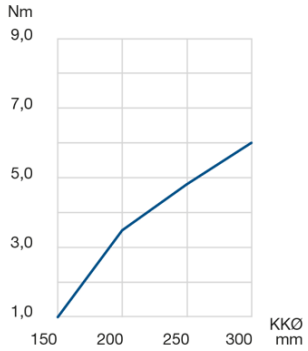

Radial and axial runout accuracy

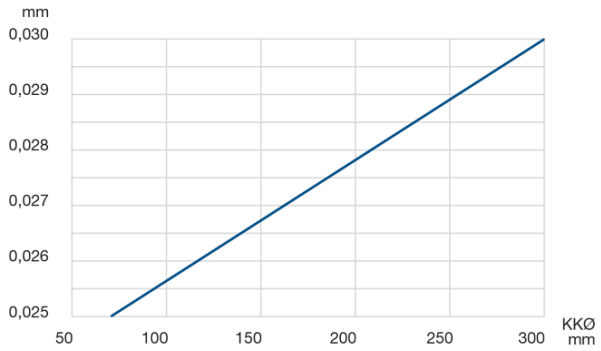

Innovation in Motion

Franke

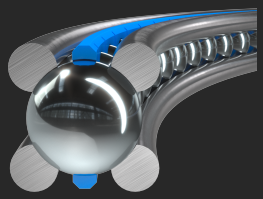

Bearing with ground raceways
Ball bearing type LEL 4

Description

Franke wire race bearings of type LEL are suitable for high demands on running characteristics and accuracy. Due to the hardened and CNC-ground raceway as well as the ideal geometrical adaptation of ball and raceway radius, they have outstanding bearing characteristics.
Wire race bearings of type LEL allow the greatest possible freedom of bearing design. The mounting space is between 5.9 mm and 20.9 mm. For special requirements, raceway thicknesses up to 20 mm and ball sizes up to 50 mm are possible.

Characteristics

Smooth running	●●●●●
Accuracy	●●●●●
Speed	●●●●●
Stiffness	●●●●
Assembly	●●●
Price	●●●

Technical Data

Material

Ball race rings: hardened and tempered chrome-silicon steel
Rolling element: hardened rolling bearing steel
Cage: polyamide or thermoplastic polyurethane

Operating temperature

–30 °C to +80 °C, briefly up to +100 °C

Peripheral speed

Max. 5 m/s, without seals max. 10 m/s

Lubricant

Klüber Isoflex Topas NCA52 (recommended)

Bearing with ground raceways
Ball bearing type LEL 4

Dimensions and Data Tables

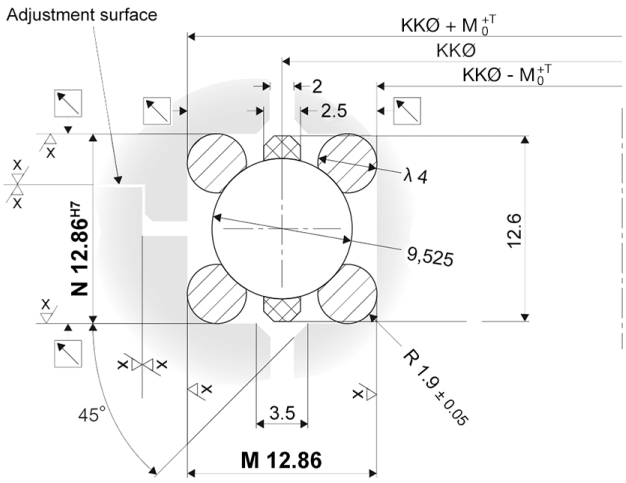

T = KKØ / 10000 [mm]

Bearing with ground raceways
Ball bearing type LEL 4

		Load Ratings kN				Static Moment kNm	
Name	KKØ mm	C_{0a}	C_{0r}	C_a	C_r	C_{0m}	Weight kg
LEL4-0200	200	117	55	25	21	5,5	0,39
LEL4-0210	210	123	58	25	22	6,1	0,40
LEL4-0220	220	131	62	26	22	6,8	0,43
LEL4-0230	230	136	64	26	23	7,4	0,44
LEL4-0240	240	142	67	27	23	8,0	0,46
LEL4-0250	250	147	69	27	23	8,7	0,48
LEL4-0260	260	155	73	28	24	9,5	0,50
LEL4-0270	270	161	76	28	24	10,2	0,52
LEL4-0280	280	166	78	28	24	11,0	0,54
LEL4-0290	290	172	81	29	25	11,7	0,56
LEL4-0300	300	180	85	29	25	12,7	0,58
LEL4-0310	310	185	87	29	25	13,5	0,60
LEL4-0320	320	191	90	30	26	14,4	0,62
LEL4-0340	340	202	95	30	26	16,1	0,66
LEL4-0360	360	215	101	31	27	18,2	0,70
LEL4-0380	380	226	106	32	27	20,2	0,73
LEL4-0400	400	240	113	32	28	22,6	0,77
LEL4-0420	420	250	118	33	28	24,8	0,81
LEL4-0440	440	264	124	34	29	27,3	0,85
LEL4-0460	460	275	129	34	29	29,8	1,46
LEL4-0480	480	288	136	35	30	32,6	0,93
LEL4-0500	500	299	141	35	30	35,2	0,97
LEL4-0520	520	313	147	36	31	38,3	1,01
LEL4-0540	540	324	152	36	31	41,1	1,04
LEL4-0560	560	337	159	37	32	44,5	1,09
LEL4-0570	570	343	161	37	32	46,0	1,10
LEL4-0580	580	348	164	37	32	47,5	1,12
LEL4-0600	600	362	170	38	33	51,1	1,16
LEL4-0620	620	373	175	38	33	54,4	1,20
LEL4-0640	640	384	181	38	33	57,8	1,24
LEL4-0660	660	397	187	39	34	61,7	1,28
LEL4-0680	680	408	192	39	34	65,3	1,31
LEL4-0700	700	422	199	40	34	69,4	1,36
LEL4-0720	720	432	204	40	35	73,3	1,39
LEL4-0740	740	446	210	41	35	77,6	1,43
LEL4-0760	760	457	215	41	35	81,7	1,47
LEL4-0780	780	470	222	41	36	86,3	1,51
LEL4-0800	800	481	227	42	36	90,6	1,55
LEL4-0820	820	495	233	42	37	95,5	1,59
LEL4-0840	840	506	238	43	37	99,9	1,63
LEL4-0860	860	519	245	43	37	105,1	1,67
LEL4-0880	880	530	250	43	37	109,8	1,70
LEL4-0900	900	544	256	44	38	115,1	1,74

Bearing with ground raceways
Ball bearing type LEL 4

		Load Ratings kN				Static Moment kNm	
Name	KKØ mm	C_{0a}	C_{0r}	C_a	C_r	C_{0m}	Weight kg
LEL4-0920	920	554.75	261.06	44	38	120,1	1,78
LEL4-0960	960	579	273	45	39	130,8	1,86
LEL4-1000	1000	603	284	45	39	142,0	1,94
LEL4-1100	1100	663	312	47	41	171,6	2,13
LEL4-1200	1200	726	342	49	42	204,9	2,33
LEL4-1300	1300	785	370	50	43	240,2	2,52
LEL4-1400	1400	845	398	51	44	278,4	2,71
LEL4-1500	1500	908	427	53	46	320,3	2,91

Bearing with ground raceways
Ball bearing type LEL 4

Rotational resistance

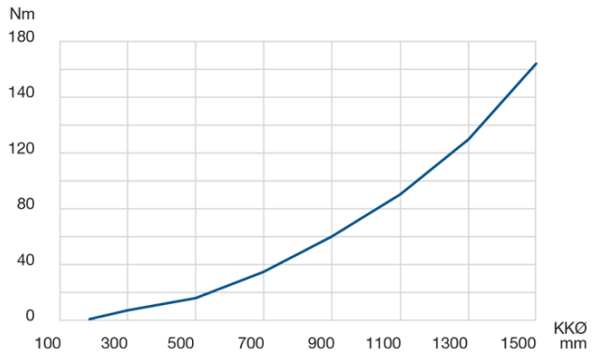

Radial and axial runout accuracy

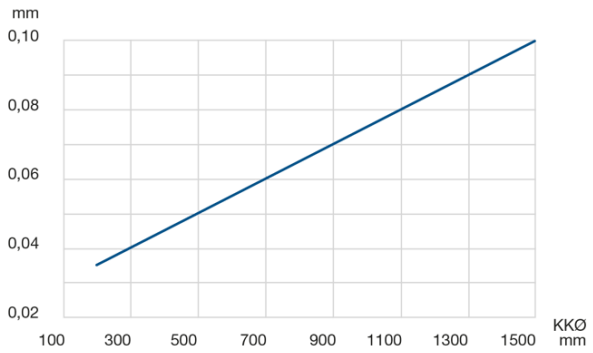

Innovation in Motion

Franke

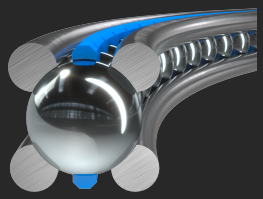

Bearing with ground raceways
Ball bearing type LEL 5

Description

Franke wire race bearings of type LEL are suitable for high demands on running characteristics and accuracy. Due to the hardened and CNC-ground raceway as well as the ideal geometrical adaptation of ball and raceway radius, they have outstanding bearing characteristics.
Wire race bearings of type LEL allow the greatest possible freedom of bearing design. The mounting space is between 5.9 mm and 20.9 mm. For special requirements, raceway thicknesses up to 20 mm and ball sizes up to 50 mm are possible.

Characteristics

Smooth running	●●●●●
Accuracy	●●●●●
Speed	●●●●●
Stiffness	●●●●
Assembly	●●●
Price	●●●

Technical Data

Material

Ball race rings: hardened and tempered chrome-silicon steel
Rolling element: hardened rolling bearing steel
Cage: polyamide or thermoplastic polyurethane

Operating temperature

–30 °C to +80 °C, briefly up to +100 °C

Peripheral speed

Max. 5 m/s, without seals max. 10 m/s

Lubricant

Klüber Isoflex Topas NCA52 (recommended)

Bearing with ground raceways
Ball bearing type LEL 5

Dimensions and Data Tables

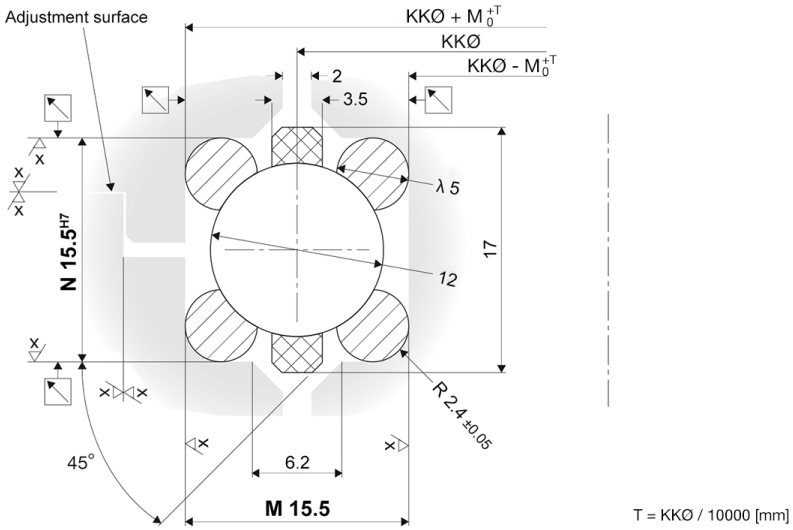

Bearing with ground raceways
Ball bearing type LEL 5

		Load Ratings kN				Static Moment kNm	
Name	KKØ mm	C_{0a}	C_{0r}	C_a	C_r	C_{0m}	Weight kg
LEL5-0220	220	262	123	39	34	13,6	0,70
LEL5-0230	230	273	129	39	34	14,8	0,73
LEL5-0240	240	284	134	40	34	16,0	0,76
LEL5-0250	250	294	139	40	35	17,3	0,79
LEL5-0260	260	305	144	41	35	18,7	0,82
LEL5-0270	270	322	152	42	36	20,4	0,86
LEL5-0280	280	333	157	42	37	21,9	0,90
LEL5-0290	290	343	162	43	37	23,4	0,92
LEL5-0300	300	360	170	44	38	25,4	0,96
LEL5-0320	320	382	180	45	39	28,7	1,02
LEL5-0340	340	403	190	45	39	32,3	1,08
LEL5-0360	360	431	203	47	40	36,5	1,14
LEL5-0380	380	452	213	47	41	40,4	1,20
LEL5-0400	400	474	222	48	44	44,6	1,28
LEL5-0420	420	501	236	49	43	49,5	1,34
LEL5-0440	440	523	247	50	43	54,2	1,39
LEL5-0460	460	550	259	51	44	334,9	1,47
LEL5-0480	480	572	270	52	45	64,6	1,52
LEL5-0500	500	599	282	53	46	70,5	1,59
LEL5-0520	520	621	293	53	46	76,0	1,65
LEL5-0540	540	648	305	54	47	82,4	1,71
LEL5-0560	560	670	316	55	47	88,3	1,77
LEL5-0580	580	692	326	55	48	94,4	1,83
LEL5-0600	600	719	339	56	49	101,5	1,90
LEL5-0620	620	741	349	57	49	108,1	1,96
LEL5-0640	640	768	362	58	50	115,7	2,03
LEL5-0660	660	790	372	58	50	122,7	2,09
LEL5-0680	680	817	385	59	51	130,7	2,16
LEL5-0700	700	839	395	59	51	138,2	2,22
LEL5-0720	720	861	406	60	52	145,8	2,28
LEL5-0740	740	888	418	61	53	154,6	2,35
LEL5-0760	760	910	429	61	53	162,7	2,41
LEL5-0780	780	937	441	62	54	171,9	2,47
LEL5-0800	800	959	452	62	54	180,4	2,53
LEL5-0820	820	986	465	63	55	190,2	2,60
LEL5-0840	840	1008	475	64	55	199,1	2,66
LEL5-0860	860	1035	488	64	56	209,4	2,73
LEL5-0880	880	1057	498	65	56	218,8	2,79
LEL5-0900	900	1078	508	65	56	228,4	2,85
LEL5-0920	920	1106	521	66	57	239,3	2,92
LEL5-0960	960	1155	544	67	58	260,8	3,05
LEL5-0940	940	1127	531	66	57	249,3	2,98
LEL5-0980	980	1176	554	67	58	271,3	3,11

Bearing with ground raceways
Ball bearing type LEL 5

		Load Ratings kN				Static Moment kNm	
Name	KKØ mm	C_{0a}	C_{0r}	C_a	C_r	C_{0m}	Weight kg
LEL5-1000	1000	1204	567	68	59	283,2	3,17
LEL5-1100	1100	1323	624	70	61	342,5	3,49
LEL5-1200	1200	1443	680	72	63	407,5	3,81
LEL5-1300	1300	1563	737	75	65	478,1	4,12
LEL5-1400	1400	1688	796	77	67	556,1	4,45
LEL5-1500	1500	1808	852	79	68	638,1	4,76

Bearing with ground raceways
Ball bearing type LEL 5

Rotational resistance

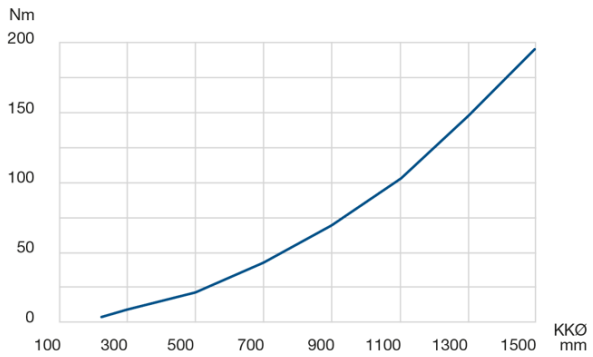

Radial and axial runout accuracy

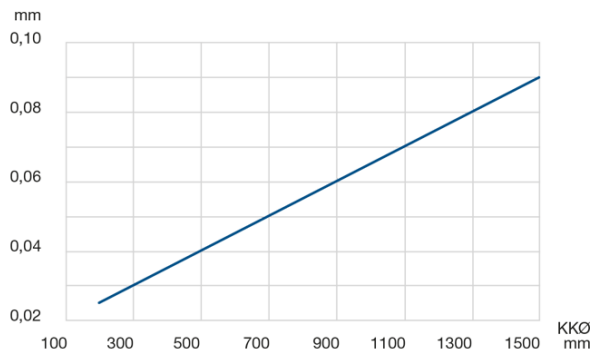

Innovation in Motion

Franke

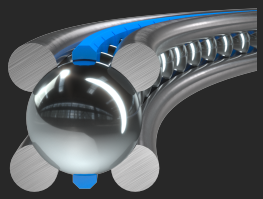

Bearing with ground raceways
Ball bearing type LEL 7

Description

Franke wire race bearings of type LEL are suitable for high demands on running characteristics and accuracy. Due to the hardened and CNC-ground raceway as well as the ideal geometrical adaptation of ball and raceway radius, they have outstanding bearing characteristics.
Wire race bearings of type LEL allow the greatest possible freedom of bearing design. The mounting space is between 5.9 mm and 20.9 mm. For special requirements, raceway thicknesses up to 20 mm and ball sizes up to 50 mm are possible.

Characteristics

Smooth running	●●●●●
Accuracy	●●●●●
Speed	●●●●●
Stiffness	●●●●
Assembly	●●●
Price	●●●

Technical Data

Material

Ball race rings: hardened and tempered chrome-silicon steel
Rolling element: hardened rolling bearing steel
Cage: polyamide or thermoplastic polyurethane

Operating temperature

–30 °C to +80 °C, briefly up to +100 °C

Peripheral speed

Max. 5 m/s, without seals max. 10 m/s

Lubricant

Klüber Isoflex Topas NCA52 (recommended)

Dimensions and Data Tables

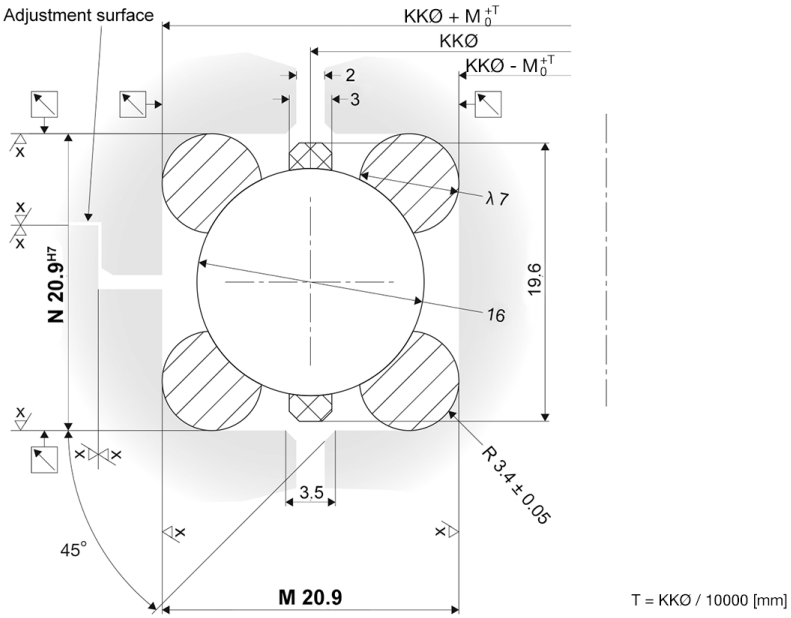

Bearing with ground raceways
Ball bearing type LEL 7

		Load Ratings kN				Static Moment kNm	
Name	KKØ mm	C_{0a}	C_{0r}	C_a	C_r	C_{0m}	Weight kg
LEL7-0340	340	470	221	59	51	37,6	1,86
LEL7-0360	360	497	234	60	52	42,1	1,97
LEL7-0380	380	524	246	61	53	46,8	2,08
LEL7-0400	400	551	259	62	54	51,8	2,19
LEL7-0420	420	578	272	63	55	57,1	2,29
LEL7-0440	440	605	285	64	56	62,6	2,40
LEL7-0460	460	632	297	65	56	68,4	2,51
LEL7-0480	480	668	314	67	58	75,4	2,63
LEL7-0500	500	695	327	68	59	81,7	2,74
LEL7-0520	520	722	340	69	59	88,3	2,85
LEL7-0540	540	749	352	70	60	95,1	2,96
LEL7-0560	560	776	365	71	61	102,2	3,06
LEL7-0580	580	803	378	71	62	109,6	3,17
LEL7-0600	600	830	390	72	62	117,2	3,28
LEL7-0620	620	857	403	73	63	125,0	3,39
LEL7-0640	640	893	420	74	64	134,5	3,51
LEL7-0660	660	920	433	75	65	142,9	3,62
LEL7-0680	680	947	445	76	66	151,5	3,73
LEL7-0700	700	974	458	77	66	160,4	3,83
LEL7-0720	720	1001	471	77	67	169,6	3,94
LEL7-0740	740	1028	484	78	68	179,0	4,05
LEL7-0760	760	1055	496	79	68	188,7	4,16
LEL7-0780	780	1082	509	80	69	198,6	4,26
LEL7-0800	800	1118	526	81	70	210,5	4,39
LEL7-0820	820	1145	539	81	70	220,9	4,50
LEL7-0840	840	1172	551	82	71	231,7	4,60
LEL7-0860	860	1199	564	83	72	242,7	4,71
LEL7-0880	880	1226	577	83	72	253,9	4,82
LEL7-0900	900	1253	590	84	73	265,4	4,93
LEL7-0920	920	1280	602	85	73	277,1	5,03
LEL7-0940	940	1307	615	85	74	289,1	5,14
LEL7-0960	960	1343	632	86	75	303,4	5,27
LEL7-0980	980	1370	645	87	75	316,0	5,37
LEL7-1000	1000	1397	657	88	76	328,8	5,48
LEL7-1060	1060	1478	695	89	77	368,7	5,80
LEL7-1100	1100	1532	721	90	78	396,6	6,02
LEL7-1160	1160	1623	763	93	80	442,9	6,36
LEL7-1200	1200	1677	789	94	81	473,4	6,57
LEL7-1260	1260	1758	827	95	82	521,1	6,90
LEL7-1300	1300	1821	856	97	83	556,9	7,13
LEL7-1360	1360	1902	895	98	85	608,6	7,45
LEL7-1400	1400	1956	920	99	86	644,3	7,67
LEL7-1460	1460	2046	962	101	87	702,8	8,01

Bearing with ground raceways
Ball bearing type LEL 7

		Load Ratings kN				Static Moment kNm	
Name	KKØ mm	C_{0a}	C_{0r}	C_a	C_r	C_{0m}	Weight kg
LEL7-1500	1500	2100	988	102	88	741,1	8,22
LEL7-1600	1600	2244	1056	104	90	844,8	8,78
LEL7-1700	1700	2379	1119	106	92	951,7	9,32
LEL7-1800	1800	2523	1187	109	94	1068,7	9,87
LEL7-1900	1900	2667	1255	111	96	1192,5	10,43
LEL7-2000	2000	2811	1323	113	98	1323,1	10,98

Bearing with ground raceways
Ball bearing type LEL 7

Rotational resistance

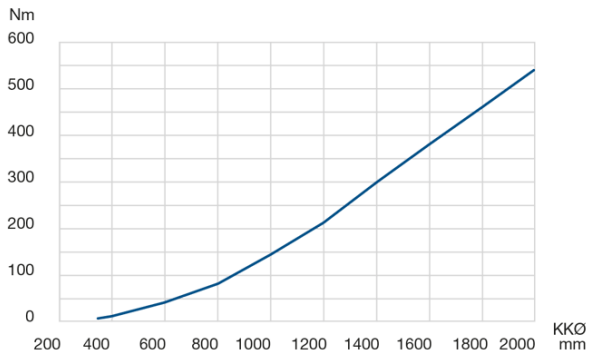

Radial and axial runout accuracy

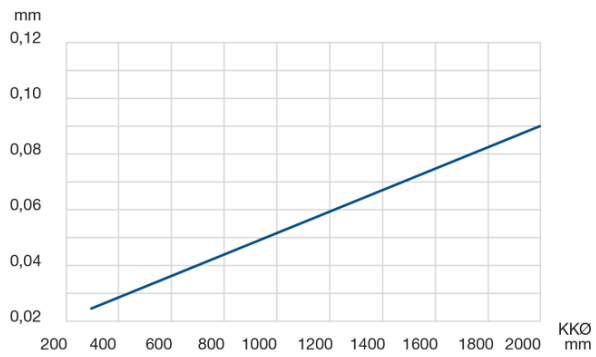

Innovation in Motion

Franke

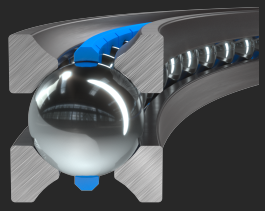

Bearing with profiled raceways
Ball bearing type LER 1.5

Description

Franke bearing elements type LER are suitable for medium rotational speeds and accuracies. They convince by smooth running, high dynamics and compact installation space. Due to the straight contact surfaces, they can be easily integrated into the surrounding design and have a high rigidity. The low price makes the bearing element of type LER an economical solution. LER are generally mounted without clearance. The preload can be individually adjusted according to the requirements.

Characteristics

Smooth running	●●●
Accuracy	●●●
Speed	●●●●●
Stiffness	●●●●
Assembly	●●●●
Price	●●●●

Technical Data

Material

Ball race rings: hardened and tempered chrome-silicon steel
Rolling element: hardened rolling bearing steel
Cage: polyamide or thermoplastic polyurethane

Operating temperature

-30 °C to +80 °C, short-term up to +100 °C

Peripheral speed

Max. 5 m/s, without seal max. 10 m/s

Lubricant

Shell Gadus S3 V220 C2

Bearing with profiled raceways
Ball bearing type LER 1.5

Dimensions and Data Tables

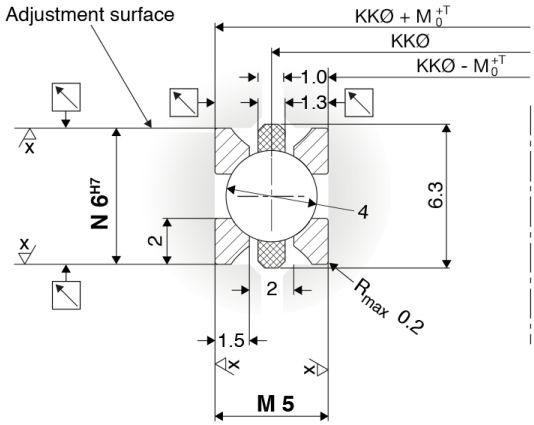

T = KKØ / 10000 [mm]

		Load Ratings kN				Static Moment kNm	
Name	KKØ mm	C_{0a}	C_{0r}	C_a	C_r	C_{0m}	Weight kg
LER1.5-0040	40	8	4	5	4	0,1	0,01
LER1.5-0050	50	11	5	5	4	0,1	0,02
LER1.5-0060	60	13	6	6	5	0,2	0,02
LER1.5-0070	70	15	7	6	5	0,2	0,03
LER1.5-0080	80	17	8	6	5	0,3	0,03
LER1.5-0090	90	20	9	6	6	0,4	0,03
LER1.5-0100	100	22	10	7	6	0,5	0,04
LER1.5-0110	110	24	11	7	6	0,6	0,04
LER1.5-0120	120	26	12	7	6	0,7	0,05
LER1.5-0130	130	29	13	7	6	0,9	0,05
LER1.5-0140	140	31	14	8	7	1,0	0,05
LER1.5-0150	150	33	15	8	7	1,2	0,06

Bearing with profiled raceways
Ball bearing type LER 1.5

Rotational resistance

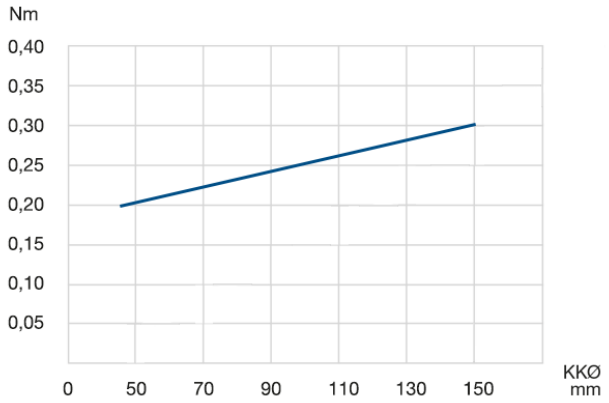

Radial and axial runout accuracy

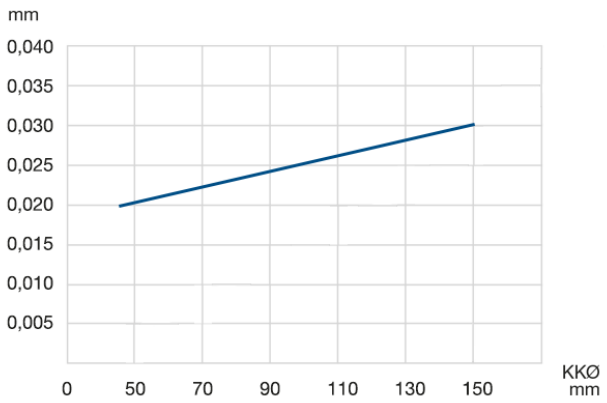

Innovation in Motion

Franke

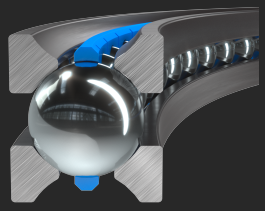

Bearing with profiled raceways
Ball bearing type LER 2

Description

Franke bearing elements type LER are suitable for medium rotational speeds and accuracies. They convince by smooth running, high dynamics and compact installation space. Due to the straight contact surfaces, they can be easily integrated into the surrounding design and have a high rigidity. The low price makes the bearing element of type LER an economical solution. LER are generally mounted without clearance. The preload can be individually adjusted according to the requirements.

Characteristics

Smooth running	●●●
Accuracy	●●●
Speed	●●●●●
Stiffness	●●●●
Assembly	●●●●
Price	●●●●

Technical Data

Material

Ball race rings: hardened and tempered chrome-silicon steel
Rolling element: hardened rolling bearing steel
Cage: polyamide or thermoplastic polyurethane

Operating temperature

-30 °C to +80 °C, short-term up to +100 °C

Peripheral speed

Max. 5 m/s, without seal max. 10 m/s

Lubricant

Shell Gadus S3 V220 C2

Bearing with profiled raceways
Ball bearing type LER 2

Dimensions and Data Tables

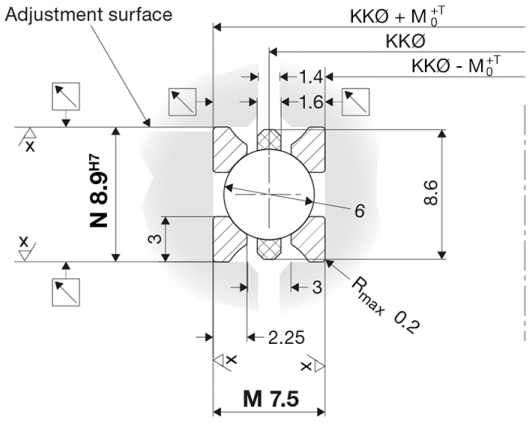

T = KKØ / 10000 [mm]

		Load Ratings kN				Static Moment kNm	
Name	KKØ mm	C_{0a}	C_{0r}	C_a	C_r	C_{0m}	Weight kg
LER2-0080	80	28	13	11	9	0,5	0,06
LER2-0100	100	35	17	12	10	0,8	0,08
LER2-0120	120	42	20	12	11	1,2	0,10
LER2-0140	140	49	23	13	11	1,6	0,11
LER2-0160	160	56	27	14	12	2,1	0,13
LER2-0180	180	64	30	14	12	2,7	0,15
LER2-0200	200	71	33	15	13	3,3	0,16
LER2-0220	220	77	36	15	13	4,0	0,18
LER2-0240	240	85	40	16	14	4,8	0,19
LER2-0260	260	92	43	17	14	5,6	0,21
LER2-0280	280	100	47	17	15	6,6	0,23
LER2-0300	300	107	50	17	15	7,6	0,24
LER2-0320	320	113	53	18	15	8,5	0,26
LER2-0340	340	121	57	18	16	9,7	0,28
LER2-0360	360	128	60	19	16	10,9	0,29
LER2-0380	380	136	64	19	16	12,1	0,31
LER2-0400	400	143	67	19	17	13,5	0,33

Bearing with profiled raceways
Ball bearing type LER 2

Rotational resistance

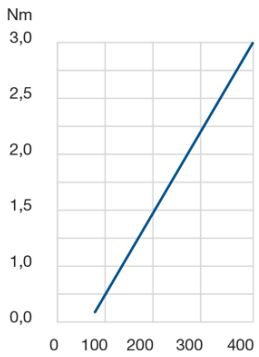

Radial and axial runout accuracy

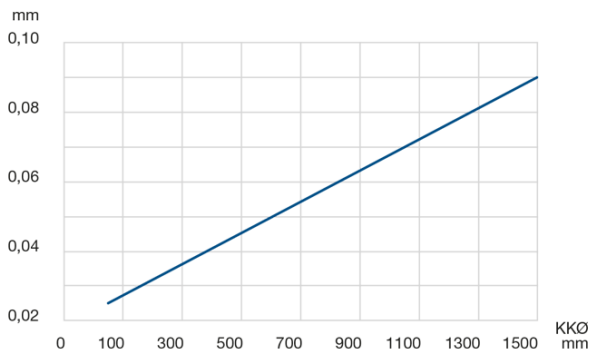

Innovation in Motion

Franke

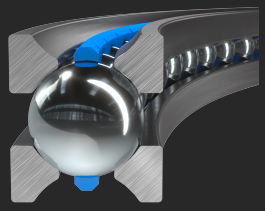

Bearing with profiled raceways
Ball bearing type LER 3

Description

Franke bearing elements type LER are suitable for medium rotational speeds and accuracies. They convince by smooth running, high dynamics and compact installation space. Due to the straight contact surfaces, they can be easily integrated into the surrounding design and have a high rigidity. The low price makes the bearing element of type LER an economical solution. LER are generally mounted without clearance. The preload can be individually adjusted according to the requirements.

Characteristics

Smooth running	●●●
Accuracy	●●●
Speed	●●●●●
Stiffness	●●●●
Assembly	●●●●
Price	●●●●

Technical Data

Material

Ball race rings: hardened and tempered chrome-silicon steel
Rolling element: hardened rolling bearing steel
Cage: polyamide or thermoplastic polyurethane

Operating temperature

-30 °C to +80 °C, short-term up to +100 °C

Peripheral speed

Max. 5 m/s, without seal max. 10 m/s

Lubricant

Shell Gadus S3 V220 C2

Dimensions and Data Tables

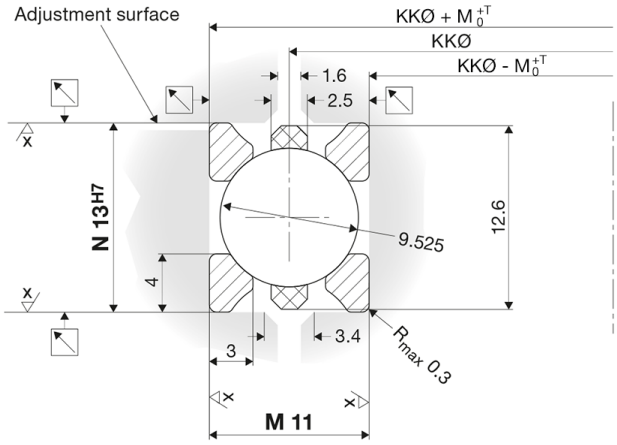

T = KKØ / 10000 [mm]

Bearing with profiled raceways
Ball bearing type LER 3

		Load Ratings kN				Static Moment kNm	
Name	KKØ mm	C_{0a}	C_{0r}	C_a	C_r	C_{0m}	Weight kg
LER3-0100	100	54	25	18	15	1,3	0,17
LER3-0150	150	82	39	21	18	2,9	0,26
LER3-0200	200	110	52	23	20	5,2	0,34
LER3-0250	250	138	65	25	22	8,1	0,43
LER3-0300	300	168	79	27	24	11,9	0,52
LER3-0350	350	196	92	29	25	16,2	0,60
LER3-0400	400	224	105	30	26	21,1	0,69
LER3-0450	450	252	119	32	27	26,7	0,77
LER3-0500	500	280	132	33	28	33,0	0,86
LER3-0550	550	308	145	34	29	39,9	0,94
LER3-0600	600	339	159	35	30	47,8	1,03
LER3-0650	650	367	172	36	31	56,1	1,12
LER3-0700	700	395	186	37	32	65,0	1,20
LER3-0750	750	423	199	38	33	74,6	1,29
LER3-0800	800	451	212	39	34	84,8	1,37
LER3-0850	850	479	225	40	34	95,7	1,46
LER3-0900	900	509	239	41	35	107,8	1,55
LER3-0950	950	537	252	42	36	120,1	1,63
LER3-1000	1000	565	266	42	37	133,0	1,72
LER3-1100	1100	621	292	44	38	160,8	1,89
LER3-1200	1200	680	319	45	39	191,9	2,06
LER3-1300	1300	736	346	47	40	225,0	2,23
LER3-1400	1400	791	372	48	41	260,7	2,41
LER3-1500	1500	850	399	49	43	300,0	2,58

Bearing with profiled raceways
Ball bearing type LER 3

Rotational resistance

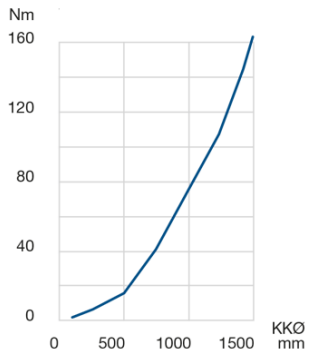

Radial and axial runout accurancy

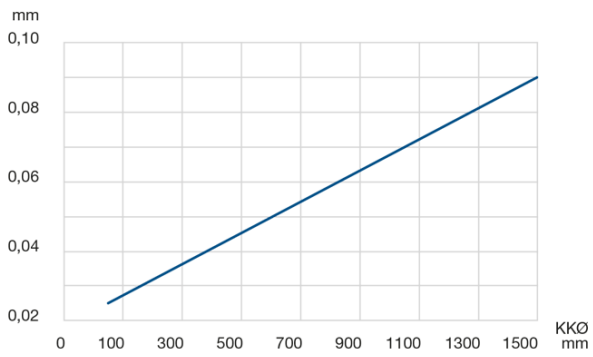

Innovation in Motion

Franke

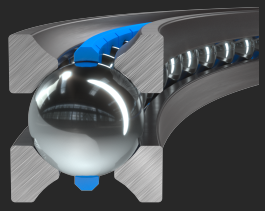

Bearing with profiled raceways
Ball bearing type LER 4

Description

Franke bearing elements type LER are suitable for medium rotational speeds and accuracies. They convince by smooth running, high dynamics and compact installation space. Due to the straight contact surfaces, they can be easily integrated into the surrounding design and have a high rigidity. The low price makes the bearing element of type LER an economical solution. LER are generally mounted without clearance. The preload can be individually adjusted according to the requirements.

Characteristics

Smooth running	●●●
Accuracy	●●●
Speed	●●●●●
Stiffness	●●●●
Assembly	●●●●
Price	●●●●

Technical Data

Material

Ball race rings: hardened and tempered chrome-silicon steel
Rolling element: hardened rolling bearing steel
Cage: polyamide or thermoplastic polyurethane

Operating temperature

-30 °C to +80 °C, short-term up to +100 °C

Peripheral speed

Max. 5 m/s, without seal max. 10 m/s

Lubricant

Shell Gadus S3 V220 C2

Dimensions and Data Tables

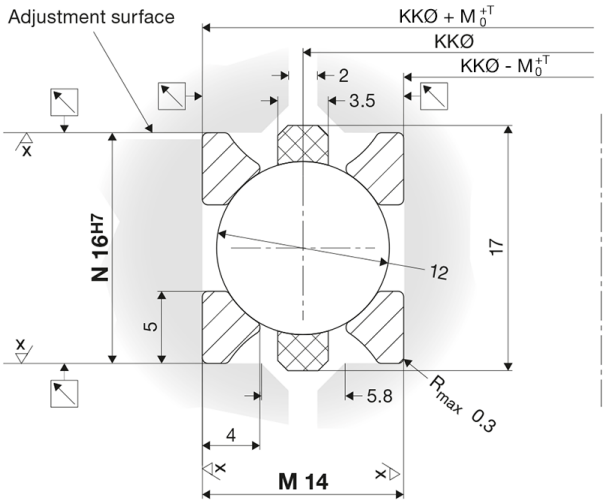

T = KKØ / 10000 [mm]

Bearing with profiled raceways
Ball bearing type LER 4

		Load Ratings kN				Static Moment kNm	
Name	KKØ mm	C_{0a}	C_{0r}	C_a	C_r	C_{0m}	Weight kg
LER4-0200	200	175	82	40	34	8,2	0,61
LER4-0250	250	219	103	43	37	12,9	0,76
LER4-0300	300	264	124	46	40	18,6	0,91
LER4-0350	350	308	145	49	42	25,4	1,06
LER4-0400	400	353	166	51	44	33,2	1,21
LER4-0450	450	401	189	54	47	42,5	1,37
LER4-0500	500	446	210	56	49	52,5	1,53
LER4-0550	550	491	231	58	50	63,5	1,68
LER4-0600	600	535	252	60	52	75,6	1,83
LER4-0650	650	580	273	62	53	88,7	1,98
LER4-0700	700	624	294	64	55	102,8	2,13
LER4-0750	750	669	315	65	56	118,0	2,29
LER4-0800	800	714	336	67	58	134,3	2,44
LER4-0850	850	758	357	68	59	151,6	2,59
LER4-0900	900	803	378	70	60	170,0	2,74
LER4-0950	950	851	401	71	62	190,3	2,90
LER4-1000	1000	896	422	73	63	210,8	3,05
LER4-1100	1100	985	464	75	65	254,9	3,36
LER4-1200	1200	1074	506	77	67	303,3	3,66
LER4-1300	1300	1163	548	80	69	355,8	3,96
LER4-1400	1400	1257	592	82	71	413,9	4,27
LER4-1500	1500	1346	633	84	73	474,9	4,58

Bearing with profiled raceways
Ball bearing type LER 4

Rotational resistance

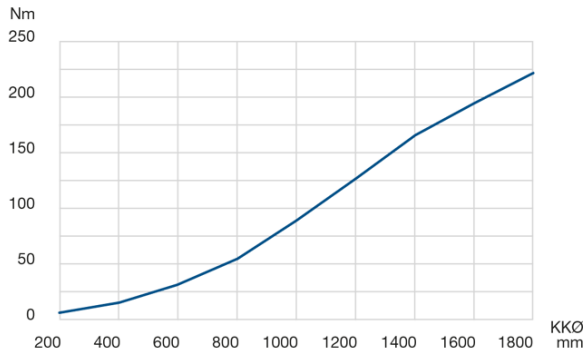

Radial and axial runout accuracy

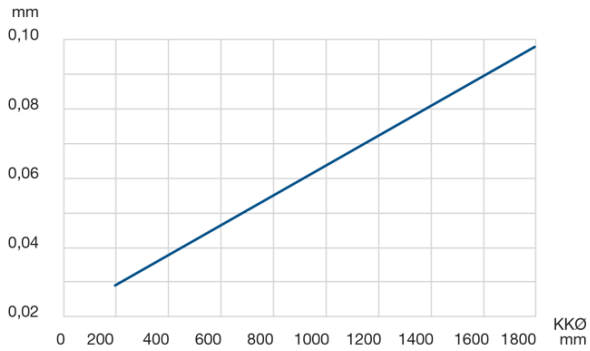

Innovation in Motion

Franke

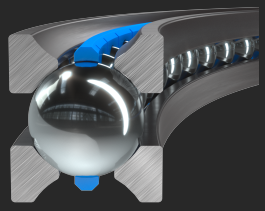

Bearing with profiled raceways
Ball bearing type LER 5

Description

Franke bearing elements type LER are suitable for medium rotational speeds and accuracies. They convince by smooth running, high dynamics and compact installation space. Due to the straight contact surfaces, they can be easily integrated into the surrounding design and have a high rigidity. The low price makes the bearing element of type LER an economical solution. LER are generally mounted without clearance. The preload can be individually adjusted according to the requirements.

Characteristics

Smooth running	●●●
Accuracy	●●●
Speed	●●●●●
Stiffness	●●●●
Assembly	●●●●
Price	●●●●

Technical Data

Material

Ball race rings: hardened and tempered chrome-silicon steel
Rolling element: hardened rolling bearing steel
Cage: polyamide or thermoplastic polyurethane

Operating temperature

-30 °C to +80 °C, short-term up to +100 °C

Peripheral speed

Max. 5 m/s, without seal max. 10 m/s

Lubricant

Shell Gadus S3 V220 C2

Bearing with profiled raceways
Ball bearing type LER 5

Dimensions and Data Tables

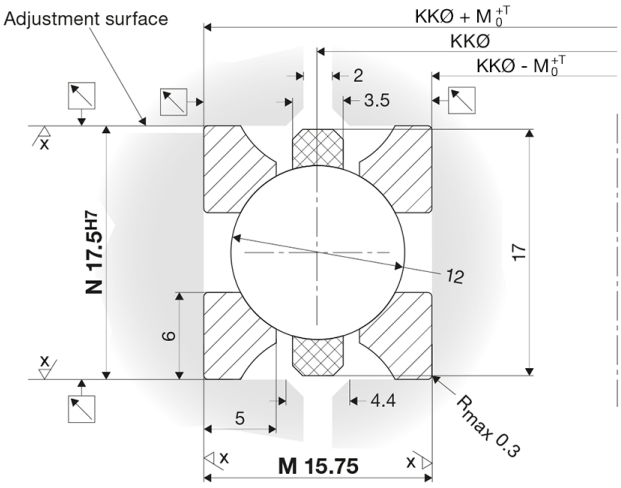

T = KKØ / 10000 [mm]

Bearing with profiled raceways
Ball bearing type LER 5

		Load Ratings kN				Static Moment kNm	
Name	KKØ mm	C_{0a}	C_{0r}	C_a	C_r	C_{0m}	Weight kg
LER5-0250	250	260	123	43	37	15,3	0,94
LER5-0300	300	313	148	46	40	22,1	1,13
LER5-0350	350	366	172	49	42	30,2	1,31
LER5-0400	400	419	197	51	44	39,5	1,50
LER5-0450	450	477	225	54	47	50,5	1,70
LER5-0500	500	530	250	56	49	62,4	1,88
LER5-0550	550	583	274	58	50	75,5	2,07
LER5-0600	600	636	299	60	52	89,8	2,26
LER5-0650	650	689	324	62	53	105,4	2,45
LER5-0700	700	742	349	64	55	122,2	2,64
LER5-0750	750	795	374	65	56	140,3	2,82
LER5-0800	800	848	399	67	58	159,6	3,01
LER5-0850	850	901	424	68	59	180,2	3,20
LER5-0900	900	954	449	70	60	202,0	3,39
LER5-0950	950	1012	476	71	62	226,1	3,58
LER5-1000	1000	1065	501	73	63	250,5	3,77
LER5-1100	1100	1171	551	75	65	303,0	4,14
LER5-1200	1200	1277	601	77	67	360,4	4,52
LER5-1300	1300	1383	651	80	69	422,9	4,90
LER5-1400	1400	1493	703	82	71	491,9	5,28
LER5-1500	1500	1599	753	84	73	564,4	5,65
LER5-1600	1600	1705	803	86	75	641,9	6,03
LER5-1700	1700	1811	853	88	76	724,4	6,40
LER5-1800	1800	1922	905	90	78	814,0	6,79

Bearing with profiled raceways
Ball bearing type LER 5

Rotational resistance

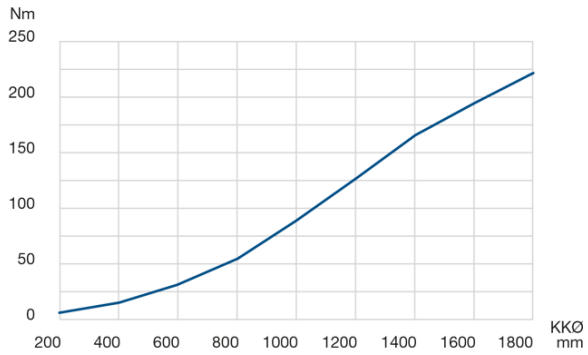

Radial and axial runout accuracy

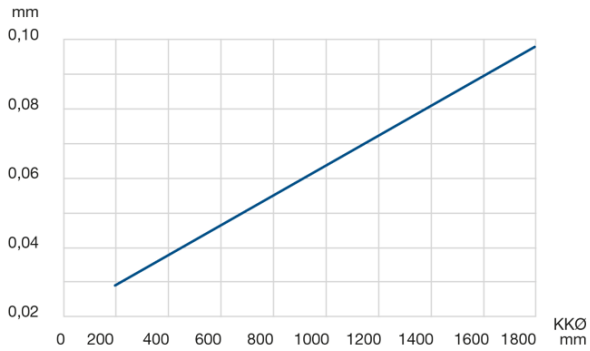

Innovation in Motion

Franke

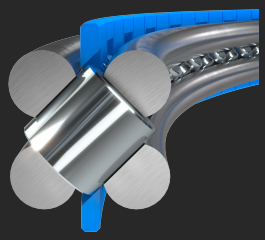

Bearing with profiled raceways
Roller bearing type LEW 4

Description

Franke wire race bearings type LEW are suitable for medium rotational speeds and accuracies. They convince by smooth running even under tilt moment loads, high rigidity and compact installation space. The crosswise arranged rollers can support high loads from all directions. Wire race bearings of model LEW are insensitive to shock and vibration. They offer the greatest possible flexibility in terms of preload, running characteristics and diameter ranges.

Characteristics

Smooth running	●●●●
Accuracy	●●●●
Speed	●●●
Stiffness	●●●●●
Assembly	●●
Price	●●●

Technical Data

Material

Ball race rings: hardened and tempered chrome-silicon steel
Rolling element: hardened rolling bearing steel
Cage: polyamide or thermoplastic polyurethane

Operating temperature

-30 °C to +80 °C, short-term up to +100 °C

Peripheral speed

Max. 4 m/s

Lubricant

Shell Gadus S3 V220 C2

Dimensions and Data Tables

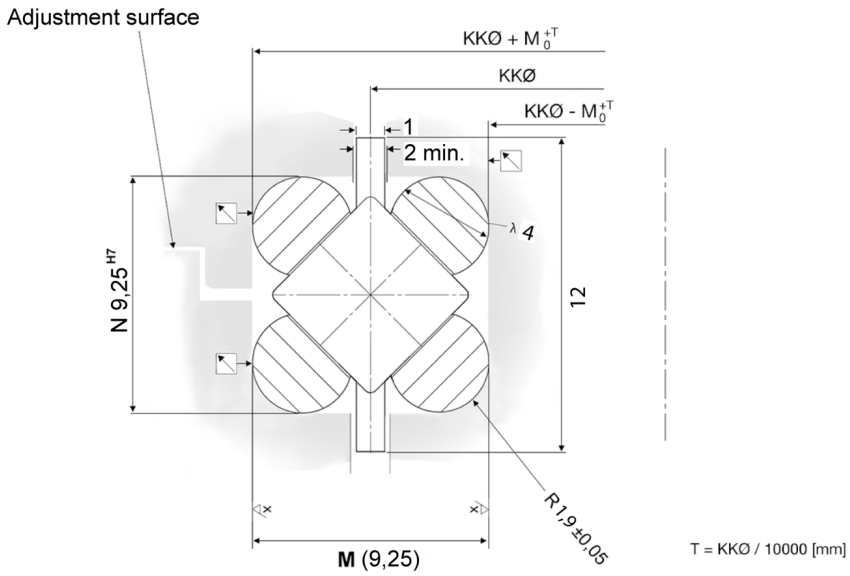

		Load Ratings kN				Static Moment kNm	
Name	**KKØ** mm	C_{0a}	C_{0r}	C_a	C_r	C_{0m}	**Weight** kg
LEW4-0150	150	81	32	34	18	2,4	0,27
LEW4-0200	200	109	44	41	21	4,4	0,21
LEW4-0250	250	137	55	45	23	6,9	0,46
LEW4-0300	300	164	66	47	25	9,8	0,55
LEW4-0350	350	192	77	53	28	13,5	0,64
LEW4-0400	400	220	88	59	31	17,6	0,73

Bearing with profiled raceways
Roller bearing type LEW 4

Rotational resistance

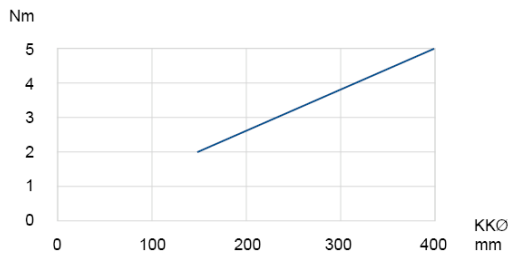

Radial and axial runout accuracy

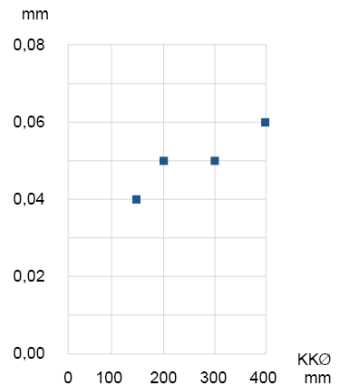

Innovation in Motion

Franke

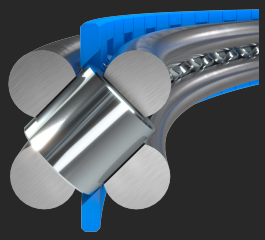

Bearing with profiled raceways
Roller bearing type LEW 7

Description

Franke wire race bearings type LEW are suitable for medium rotational speeds and accuracies. They convince by smooth running even under tilt moment loads, high rigidity and compact installation space. The crosswise arranged rollers can support high loads from all directions. Wire race bearings of model LEW are insensitive to shock and vibration. They offer the greatest possible flexibility in terms of preload, running characteristics and diameter ranges.

Characteristics

Smooth running	●●●●
Accuracy	●●●●
Speed	●●●
Stiffness	●●●●●
Assembly	●●
Price	●●●

Technical Data

Material

Ball race rings: hardened and tempered chrome-silicon steel
Rolling element: hardened rolling bearing steel
Cage: polyamide or thermoplastic polyurethane

Operating temperature

-30 °C to +80 °C, short-term up to +100 °C

Peripheral speed

Max. 4 m/s

Lubricant

Shell Gadus S3 V220 C2

Bearing with profiled raceways
Roller bearing type LEW 7

Dimensions and Data Tables

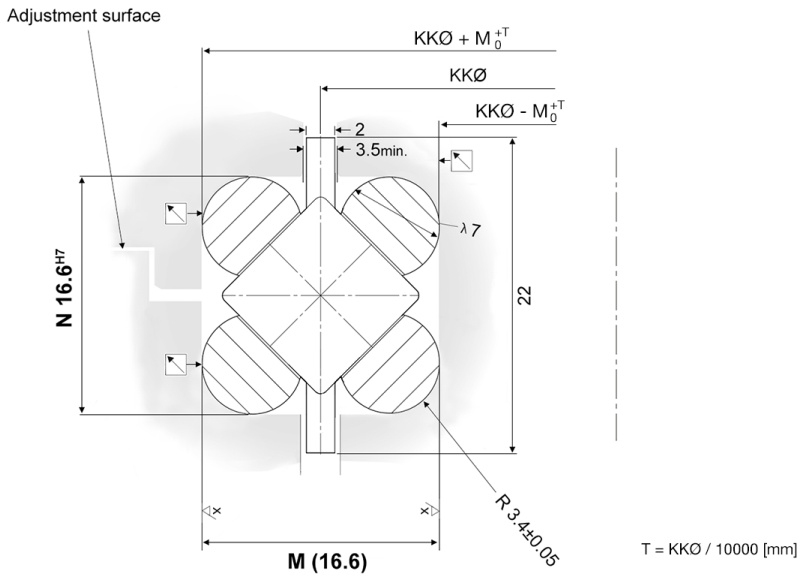

		Load Ratings kN				Static Moment kNm	
Name	KKØ mm	C_{0a}	C_{0r}	C_a	C_r	C_{0m}	Weight kg
LEW7-0400	400	354	141	91	48	28,3	1,08
LEW7-0500	500	444	177	99	52	44,4	1,34
LEW7-0600	600	534	214	114	60	64,1	1,61
LEW7-0700	700	624	250	128	67	87,3	1,88
LEW7-0800	800	714	268	129	68	114,2	2,15
LEW7-0900	900	804	322	141	74	144,7	2,42
LEW7-1000	1000	894	358	152	80	178,8	2,69
LEW7-1100	1100	984	394	164	86	216,5	2,96
LEW7-1200	1200	1074	430	175	92	257,7	3,23

Bearing with profiled raceways
Roller bearing type LEW 7

Rotational resistance

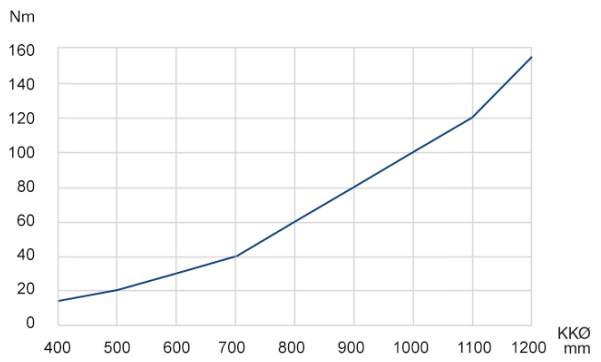

Radial and axial runout accuracy

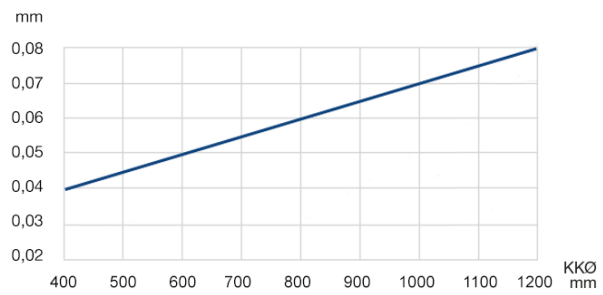

Innovation in Motion

Franke

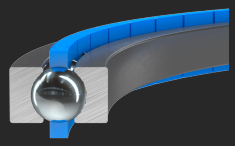

Slim Bearing with profiled raceways
Slim bearing type LSA 4

Description

Franke slim bearings of the type LSA convince by their smooth running, extremely compact installation space, simple mounting and favourable price. Slim bearings of type LSA consist of an inner and outer race with hardened and profiled raceways and a plastic cage with retained balls. The rolling elements rest against the raceways at two points each, thus maintaining the 4-point system. The raceways are split and can therefore be changed elastically in diameter for installation.

Characteristics

Smooth running	●●
Accuracy	●●
Speed	●●●●
Stiffness	●●
Assembly	●●●●●
Price	●●●●●

Technical Data

Material

Ball race rings: hardened and tempered chrome-silicon steel
Rolling element: hardened rolling bearing steel
Cage: polyamide or thermoplastic polyurethane

Operating temperature

-20 °C to +80 °C, short-term up to +100 °C

Peripheral speed

Max. 5 m/s, without seal max. 10 m/s

Lubricant

Shell Gadus S3 V220 C2

Slim Bearing with profiled raceways
Slim bearing type LSA 4

Dimensions and Data Tables

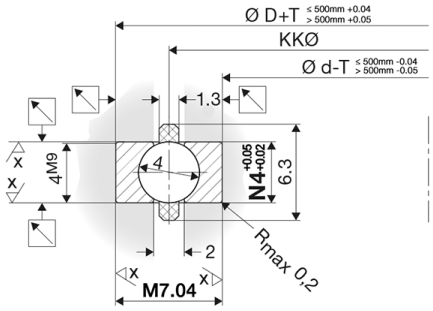

		Dimensions mm		Load Ratings kn				Static Moment kNm	
Name	**d** inch	**D**	**d**	C_{0a}	C_{0r}	C_a	C_r	C_{0m}	**Weight** kg
LSA4-04.0	4,0	115,68	101,6	38	18	9	8	1,0	0,06
LSA4-04.5	4,5	128,38	114,3	42	20	9	8	1,2	0,07
LSA4-05.0	5,0	141,08	127,0	47	22	10	8	1,5	0,07
LSA4-05.5	5,5	153,78	139,7	51	24	10	9	1,8	0,08
LSA4-06.0	6,0	166,48	152,4	56	26	10	9	2,1	0,09
LSA4-06.5	6,5	179,18	165,1	61	28	11	9	2,5	0,09
LSA4-07.0	7,0	191,88	177,8	65	31	11	9	2,8	0,10
LSA4-07.5	7,5	204,58	190,5	70	33	11	10	3,2	0,11
LSA4-08.0	8,0	217,28	203,2	74	35	11	10	3,7	0,12
LSA4-08.5	8,5	229,98	215,9	79	37	12	10	4,1	0,12
LSA4-09.0	9,0	242,68	228,6	83	39	12	10	4,6	0,13
LSA4-09.5	9,5	255,38	241,3	88	41	12	10	5,1	0,14
LSA4-10.0	10,0	268,08	254,0	92	43	12	11	5,7	0,14
LSA4-11.0	11,0	293,48	279,4	102	48	13	11	6,8	0,16
LSA4-12.0	12,0	318,88	304,8	110	52	13	11	8,1	0,17
LSA4-13.0	13,0	344,28	330,2	119	56	14	12	9,5	0,19
LSA4-14.0	14,0	369,68	355,6	128	60	14	12	11,0	0,20
LSA4-15.0	15,0	395,08	381,0	138	65	14	12	12,6	0,21

Slim Bearing with profiled raceways
Slim bearing type LSA 4

Rotational resistance

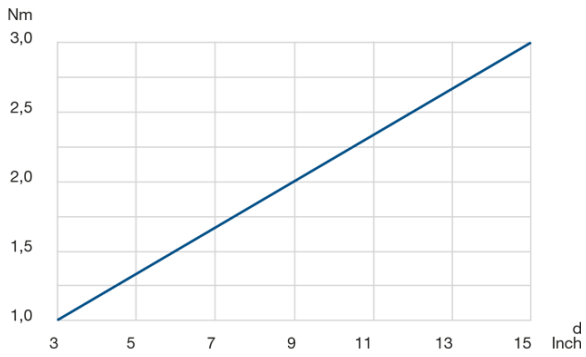

Radial and axial accuracy

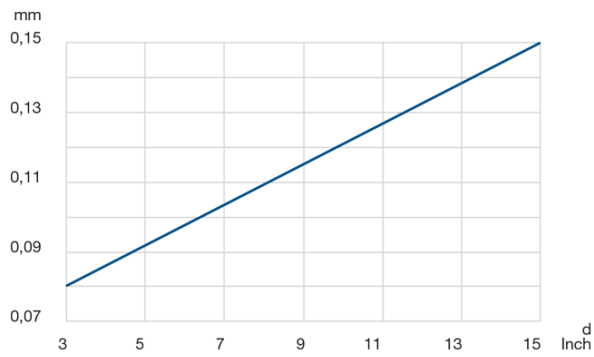

Innovation in Motion

Franke

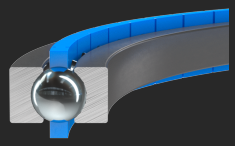

Slim Bearing with profiled raceways
Slim bearing type LSA 6

Description

Franke slim bearings of the type LSA convince by their smooth running, extremely compact installation space, simple mounting and favourable price. Slim bearings of type LSA consist of an inner and outer race with hardened and profiled raceways and a plastic cage with retained balls. The rolling elements rest against the raceways at two points each, thus maintaining the 4-point system. The raceways are split and can therefore be changed elastically in diameter for installation.

Characteristics

Smooth running	●●
Accuracy	●●
Speed	●●●●
Stiffness	●●
Assembly	●●●●●
Price	●●●●●

Technical Data

Material

Ball race rings: hardened and tempered chrome-silicon steel
Rolling element: hardened rolling bearing steel
Cage: polyamide or thermoplastic polyurethane

Operating temperature

-20 °C to +80 °C, short-term up to +100 °C

Peripheral speed

Max. 5 m/s, without seal max. 10 m/s

Lubricant

Shell Gadus S3 V220 C2

Slim Bearing with profiled raceways
Slim bearing type LSA 6

Dimensions and Data Tables

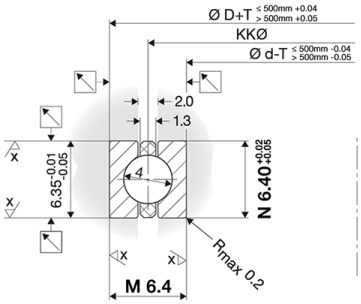

		Dimensions mm		Load Ratings kn				Static Moment kNm	
Name	**d** inch	**D**	**d**	C_{0a}	C_{0r}	C_a	C_r	C_{0m}	**Weight** kg
LSA6-04.5	4,5	127,10	114,3	60	28	9	8	1,7	0,09
LSA6-05.0	5,0	139,80	127,0	66	31	10	8	2,1	0,10
LSA6-05.5	5,5	152,50	139,7	72	34	10	9	2,5	0,11
LSA6-06.0	6,0	165,20	152,4	79	37	10	9	2,9	0,12
LSA6-06.5	6,5	177,90	165,1	85	40	11	9	3,4	0,13
LSA6-07.0	7,0	190,60	177,8	92	43	11	9	4,0	0,14
LSA6-07.5	7,5	203,30	190,5	98	46	11	10	4,5	0,15
LSA6-08.0	8,0	216,00	203,2	104	49	11	10	5,1	0,16
LSA6-08.5	8,5	228,70	215,9	110	52	12	10	5,8	0,17
LSA6-09.0	9,0	241,40	228,6	117	55	12	10	6,5	0,18
LSA6-09.5	9,5	254,10	241,3	123	58	12	10	7,2	0,19
LSA6-10.0	10,0	266,80	254,0	130	61	12	11	7,9	0,20
LSA6-11.0	11,0	292,20	279,4	142	67	13	11	9,6	0,21
LSA6-12.0	12,0	317,60	304,8	155	73	13	11	11,4	0,23
LSA6-13.0	13,0	343,00	330,2	168	79	14	12	13,3	0,25
LSA6-14.0	14,0	368,40	355,6	181	85	14	12	15,4	0,27
LSA6-15.0	15,0	393,80	381,0	194	91	14	12	17,7	0,29

Slim Bearing with profiled raceways
Slim bearing type LSA 6

Rotational resistance

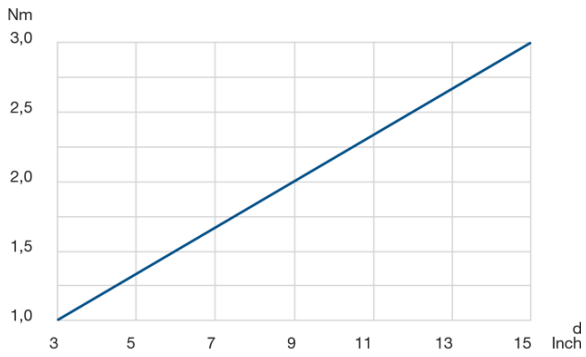

Radial and axial accurancy

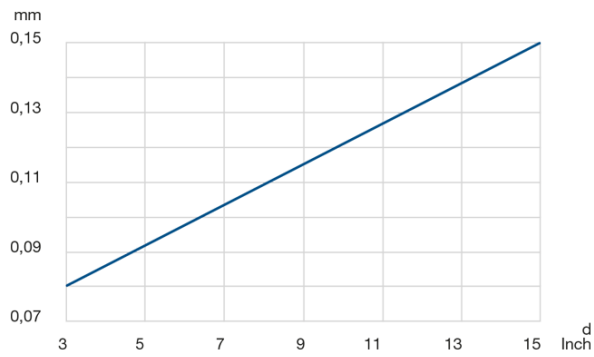

Innovation in Motion

Franke

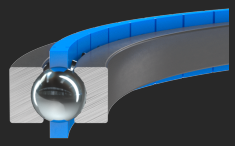

Slim Bearing with profiled raceways
Slim bearing type LSA 8

Description

Franke slim bearings of the type LSA convince by their smooth running, extremely compact installation space, simple mounting and favourable price. Slim bearings of type LSA consist of an inner and outer race with hardened and profiled raceways and a plastic cage with retained balls. The rolling elements rest against the raceways at two points each, thus maintaining the 4-point system. The raceways are split and can therefore be changed elastically in diameter for installation.

Characteristics

Smooth running	●●
Accuracy	●●
Speed	●●●●
Stiffness	●●
Assembly	●●●●●
Price	●●●●●

Technical Data

Material

Ball race rings: hardened and tempered chrome-silicon steel
Rolling element: hardened rolling bearing steel
Cage: polyamide or thermoplastic polyurethane

Operating temperature

-20 °C to +80 °C, short-term up to +100 °C

Peripheral speed

Max. 5 m/s, without seal max. 10 m/s

Lubricant

Shell Gadus S3 V220 C2

Slim Bearing with profiled raceways
Slim bearing type LSA 8

Dimensions and Data Tables

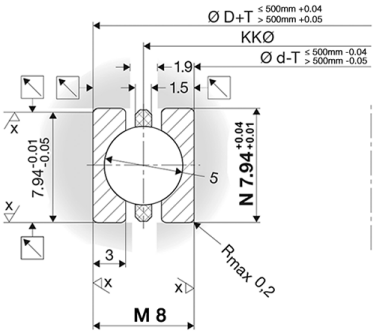

Slim Bearing with profiled raceways
Slim bearing type LSA 8

		Dimensions mm		Load Ratings kn				Static Moment kNm	
Name	d inch	D	d	C_{0a}	C_{0r}	C_a	C_r	C_{0m}	Weight kg
LSA8-05.5	5,5	155,70	139,7	82	39	16	14	2,9	0,17
LSA8-06.0	6,0	168,40	152,4	90	42	16	14	3,4	0,19
LSA8-06.5	6,5	181,10	165,1	97	46	17	15	3,9	0,20
LSA8-07.0	7,0	193,80	177,8	104	49	17	15	4,6	0,22
LSA8-07.5	7,5	206,50	190,5	111	52	18	15	5,2	0,23
LSA8-08.0	8,0	219,20	203,2	119	56	18	16	5,9	0,25
LSA8-08.5	8,5	231,90	215,9	126	59	19	16	6,6	0,26
LSA8-09.0	9,0	244,60	228,6	133	63	19	16	7,4	0,28
LSA8-09.5	9,5	257,30	241,3	140	66	19	17	8,2	0,29
LSA8-10.0	10,0	270,00	254,0	148	69	20	17	9,1	0,31
LSA8-11.0	11,0	295,40	279,4	161	76	20	18	10,9	0,34
LSA8-12.0	12,0	320,80	304,8	176	83	21	18	12,9	0,37
LSA8-13.0	13,0	346,20	330,2	190	89	22	19	15,1	0,40
LSA8-14.0	14,0	371,60	355,6	205	96	22	19	17,5	0,43
LSA8-15.0	15,0	397,00	381,0	219	103	23	20	20,1	0,46
LSA8-16.0	16,0	422,40	406,4	234	110	23	20	22,8	0,49
LSA8-17.0	17,0	447,80	431,8	248	117	24	21	25,7	0,52
LSA8-18.0	18,0	473,20	457,2	263	124	24	21	28,7	0,55
LSA8-19.0	19,0	498,60	482,6	277	130	25	22	32,0	0,58
LSA8-20.0	20,0	524,00	508,0	291	137	25	22	35,3	0,61
LSA8-22.0	22,0	574,80	558,8	320	150	26	23	42,6	0,67
LSA8-24.0	24,0	625,60	609,6	349	164	27	23	50,7	0,73
LSA8-26.0	26,0	676,40	660,4	377	177	28	24	59,3	0,79
LSA8-28.0	28,0	727,20	711,2	406	191	29	25	68,7	0,85
LSA8-30.0	30,0	778,00	762,0	435	204	29	25	78,8	0,91

Slim Bearing with profiled raceways
Slim bearing type LSA 8

Rotational resistance

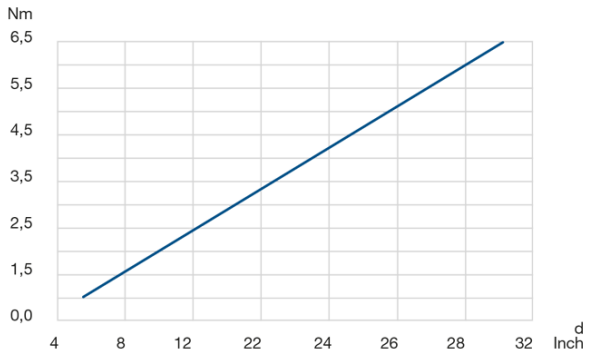

Radial and axial accurancy

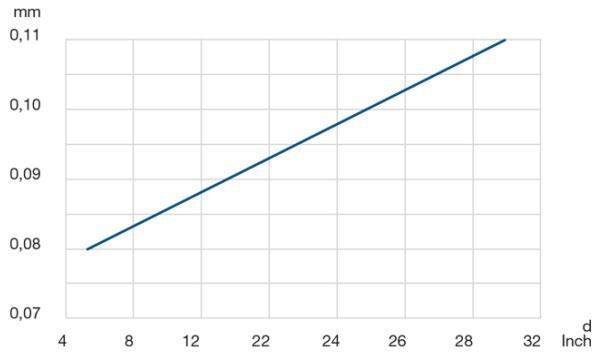

Innovation in Motion

Franke

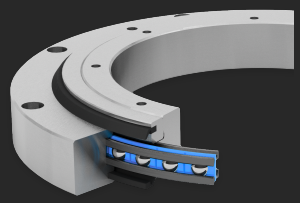

Slewing ring made of steel
Ball bearing type LVA

Characteristics

Smooth running	●●●
Resilience	●●●●
Speed	●●●●
Stiffness	●●●
Weight	●●●
Price	●●●●●

Technical Data

Material

Inner / Outer ring: C45N
Ball race rings: hardened and tempered chrome-silicon steel
Rolling element: hardened rolling bearing steel
Cage: polyamide or thermoplastic polyurethane
Sealing: NBR

Operating temperature

-20 °C to +80 °C, short-term up to +100 °C

Peripheral speed

Max. 5 m/s, without seal max. 10 m/s

Lubricant

Shell Gadus S3 V220 C2

Relubrication

Via grease nipples to DIN 3405

Slewing ring made of steel
Ball bearing type LVA

Innovation in Motion

Franke

Dimensions and Data Tables

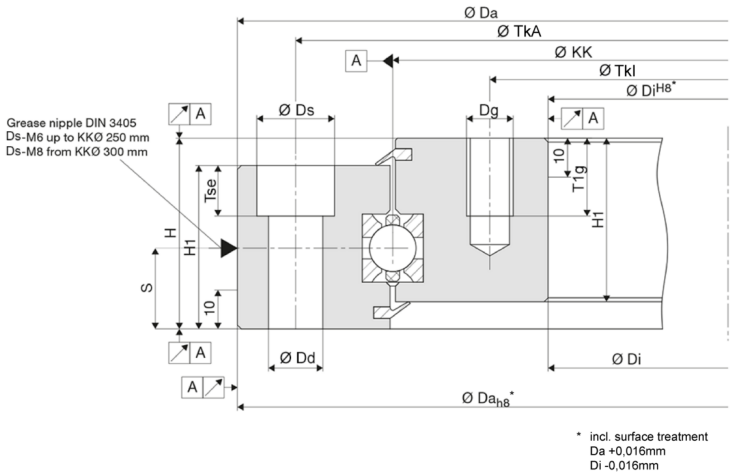

		Dimensions mm											Fastening per Ring
Name	KKØ mm	Ds	Dd	H	H1	Dg	Tse	T1g	Da	Di	TkA	TkI	
LVA-0100	100	11	6.6	34	27	M6	6.8	10	150	50	135	65	6
LVA-0150	150	11	6.6	34	27	M6	6.8	10	200	100	185	115	6
LVA-0200	200	11	6.6	34	27	M6	6.8	10	250	150	235	165	8
LVA-0250	250	11	6.6	34	27	M6	6.8	10	300	200	285	215	10
LVA-0300	300	15	9	38	31	M8	9	15	360	240	340	260	12
LVA-0350	350	15	9	38	31	M8	9	15	410	290	390	310	14
LVA-0400	400	18	11	44	37	M10	11	15	470	330	445	355	14
LVA-0450	450	18	11	44	37	M10	11	15	520	380	495	405	14
LVA-0500	500	20	14	49	42	M12	13	20	580	420	550	450	14
LVA-0600	600	20	14	49	42	M12	13	20	680	520	650	550	16
LVA-0700	700	20	14	53	45	M12	13	20	790	610	750	650	22
LVA-0800	800	20	14	53	45	M12	13	20	890	710	850	750	24
LVA-0900	900	20	14	53	45	M12	13	20	990	810	950	850	24
LVA-1000	1000	20	14	53	45	M12	13	20	1090	910	1050	950	26
LVA-1200	1200	26	18	60	52	M16	17.5	25	1300	1100	1265	1135	30
LVA-1400	1400	26	18	60	52	M16	17.5	25	1500	1300	1465	1335	36
LVA-1600	1600	26	18	90	82	M16	17.5	25	1730	1470	1685	1515	42
LVA-1800	1800	26	18	90	82	M16	17.5	25	1930	1670	1885	1715	46

Slewing ring made of steel
Ball bearing type LVA

		Load Ratings kN				Static Moment kNm	
Name	KKØ mm	C_{0a}	C_{0r}	C_a	C_r	C_{0m}	Weight kg
LVA-0100	100	54	25	18	15	1,3	3,00
LVA-0150	150	82	39	21	18	2,9	4,60
LVA-0200	200	110	52	23	20	5,2	6,10
LVA-0250	250	138	65	25	22	8,1	7,60
LVA-0300	300	168	79	27	24	11,9	12,40
LVA-0350	350	196	92	29	25	16,2	15,00
LVA-0400	400	419	197	51	44	39,5	23,70
LVA-0450	450	477	225	54	47	50,5	26,70
LVA-0500	500	530	250	56	49	62,4	39,10
LVA-0600	600	636	299	60	52	89,8	46,90
LVA-0700	700	742	349	64	55	122,2	66,50
LVA-0800	800	848	399	67	58	159,6	76,00
LVA-0900	900	954	449	70	60	202,0	85,60
LVA-1000	1000	1065	501	73	63	250,5	95,00
LVA-1200	1200	1677	789	94	81	473,4	114,80
LVA-1400	1400	1956	920	99	86	644,3	169,00
LVA-1600	1600	1984	933	140	121	747,1	399,00
LVA-1800	1800	2234	1050	146	126	946,0	449,00

Slewing ring made of steel
Ball bearing type LVA

Rotational resistance

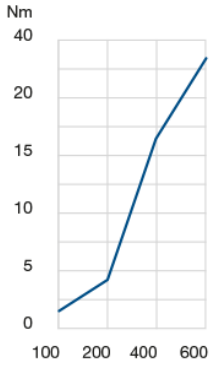

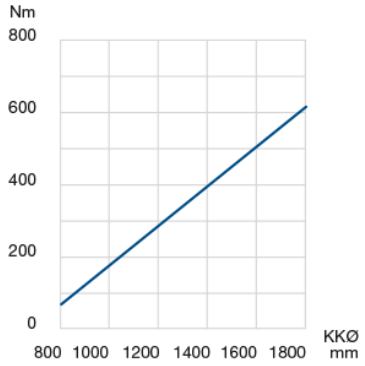

Radial and axial runout accuracy

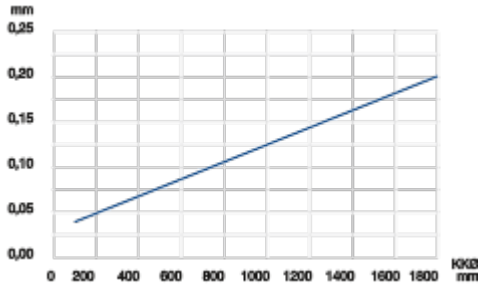

Innovation in Motion

Franke

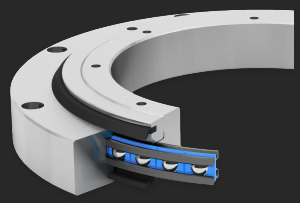

Slewing ring made of aluminium
Ball bearing type LVB

Characteristics

Smooth running	●●●
Resilience	●●●●
Speed	●●●●
Stiffness	●●●
Weight	●●●●●
Price	●●●

Technical Data

Material

Inner / Outer ring: aluminium, anodized
Ball race rings: hardened and tempered chrome-silicon steel
Rolling element: hardened rolling bearing steel
Cage: polyamide or thermoplastic polyurethane
Sealing: NBR

Operating temperature

-20 °C to +80 °C, short-term up to +100 °C

Peripheral speed

Max. 5 m/s, without seal max. 10 m/s

Lubricant

Shell Gadus S3 V220 C2

Relubrication

Via grease nipples to DIN 3405

Slewing ring made of aluminium
Ball bearing type LVB

Dimensions and Data Tables

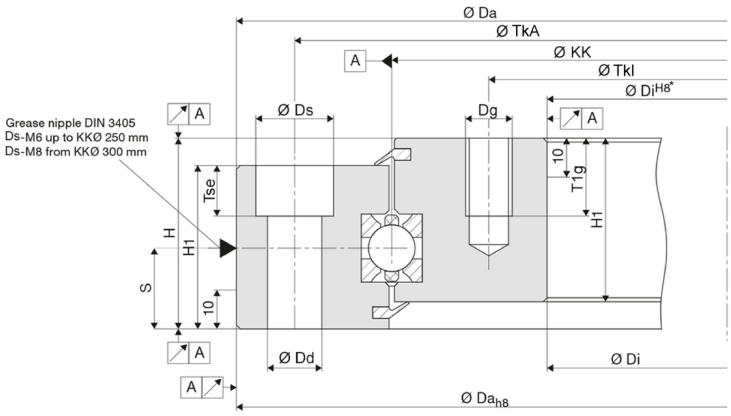

		Dimensions mm											Fastening per Ring
Name	**KKØ mm**	**Ds**	**Dd**	**H**	**H1**	**Dg**	**Tse**	**T1g**	**Da_{h8}**	**Di^{H8}**	**TkA**	**Tkl**	
LVB-0100	100	11	6.6	34	27	M6	6.8	10	150	50	135	65	6
LVB-0150	150	11	6.6	34	27	M6	6.8	10	200	100	185	115	6
LVB-0200	200	11	6.6	34	27	M6	6.8	10	250	150	235	165	8
LVB-0250	250	11	6.6	34	27	M6	6.8	10	300	200	285	215	10
LVB-0300	300	15	9	38	31	M8	9	15	360	240	340	260	12
LVB-0350	350	15	9	38	31	M8	9	15	410	290	390	310	14
LVB-0400	400	18	11	44	37	M10	11	15	470	330	445	355	14
LVB-0450	450	18	11	44	37	M10	11	15	520	380	495	405	14
LVB-0500	500	20	14	49	42	M12	13	20	580	420	550	450	14
LVB-0600	600	20	14	49	42	M12	13	20	680	520	650	550	16
LVB-0700	700	20	14	53	45	M12	13	20	790	610	750	650	22
LVB-0800	800	20	14	53	45	M12	13	20	890	710	850	750	24
LVB-0900	900	20	14	53	45	M12	13	20	990	810	950	850	24
LVB-1000	1000	20	14	53	45	M12	13	20	1090	910	1050	950	26
LVB-1200	1200	26	18	60	52	M16	17.5	25	1300	1100	1265	1135	30
LVB-1400	1400	26	18	60	52	M16	17.5	25	1500	1300	1465	1335	36
LVB-1600	1600	26	18	90	82	M16	17.5	25	1730	1470	1685	1515	42
LVB-1800	1800	26	18	90	-	M16	17.5	25	1930	1670	1885	1715	46

Slewing ring made of aluminium
Ball bearing type LVB

		Load Ratings kN				Static Moment kNm	
Name	KKØ mm	C_{0a}	C_{0r}	C_a	C_r	C_{0m}	Weight kg
LVB-0100	100	54	25	18	15	1,3	1,20
LVB-0150	150	82	39	21	18	2,9	1,80
LVB-0200	200	110	52	23	20	5,2	2,40
LVB-0250	250	138	65	25	22	8,1	3,00
LVB-0300	300	168	79	27	24	11,9	4,90
LVB-0350	350	196	92	29	25	16,2	5,80
LVB-0400	400	419	197	51	44	39,5	9,50
LVB-0450	450	477	225	54	47	50,5	10,60
LVB-0500	500	530	250	56	49	62,4	15,10
LVB-0600	600	636	299	60	52	89,8	18,20
LVB-0700	700	742	349	64	55	122,2	25,50
LVB-0800	800	848	399	67	58	159,6	29,10
LVB-0900	900	954	449	70	60	202,0	32,80
LVB-1000	1000	1065	501	73	63	250,5	36,40
LVB-1200	1200	1677	789	94	81	473,4	56,00
LVB-1400	1400	1956	920	99	86	644,3	65,30
LVB-1600	1600	1984	933	140	121	747,1	148,20
LVB-1800	1800	2234	1050	146	126	946,0	166,70

Slewing ring made of aluminium
Ball bearing type LVB

Rotational resistance

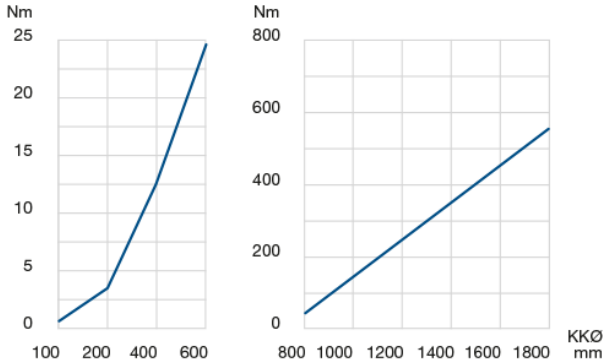

Radial and axial runout accuracy

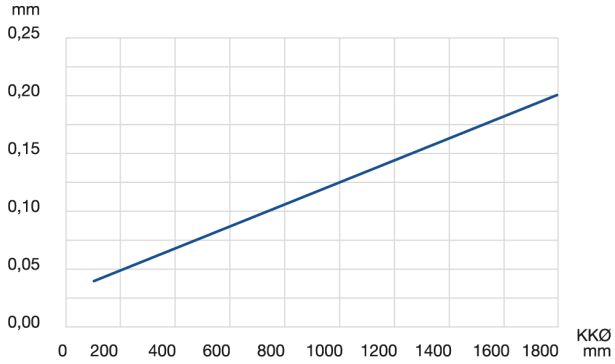

Innovation in Motion

Franke

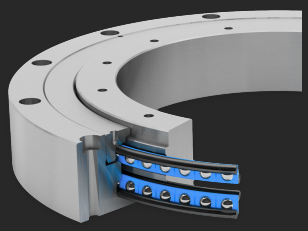

Slewing ring made of steel
Angular contact ball bearing type LVC

Characteristics

Smooth running	●●●●●
Resilience	●●●●
Speed	●●●●●
Stiffness	●●●●
Weight	●●
Price	●●

Technical Data

Material

Inner / Outer ring: C45N
Ball race rings: hardened and tempered chrome-silicon steel
Rolling element: hardened rolling bearing steel
Cage: polyamide or thermoplastic polyurethane
Sealing: NBR

Operating temperature

-20 °C to +80 °C, short-term up to +100 °C

Peripheral speed

Max. 20 m/s

Lubricant

Shell Gadus S3 V220 C2

Relubrication

Via grease nipples to DIN 3405

Slewing ring made of steel
Angular contact ball bearing type LVC

Dimensions and Data Tables

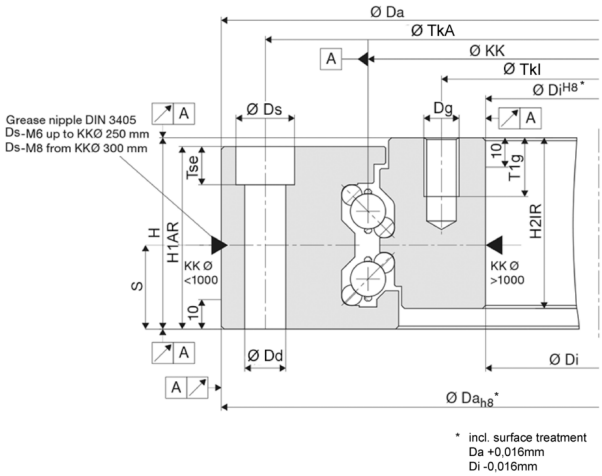

		Dimensions mm												Fastening per Ring
Name	KKØ mm	Ds	Dd	H	H1AR	H2IR	Dg	Tse	T1g	Da_{h8}	Di^{H8}	TkA	TkI	
LVC-0100	100	11	6.6	34	33	33	M6	6.8	10	150	50	135	65	6
LVC-0150	150	11	6.6	34	33	33	M6	6.8	10	200	100	185	115	6
LVC-0200	200	11	6.6	34	33	33	M6	6.8	10	250	150	235	165	8
LVC-0250	250	11	6.6	34	33	33	M6	6.8	10	300	200	285	215	10
LVC-0300	300	18	11	57	54	50	M10	11	15	380	230	355	255	12
LVC-0350	350	18	11	57	54	50	M10	11	15	430	280	405	305	14
LVC-0400	400	18	11	57	54	50	M10	11	15	480	330	455	355	14
LVC-0450	450	18	11	57	54	50	M10	11	15	530	380	505	405	14
LVC-0500	500	20	14	65	62	58	M12	13	20	600	420	570	450	14
LVC-0600	600	20	14	65	62	58	M12	13	20	700	520	670	550	16
LVC-0700	700	20	14	65	62	58	M12	13	20	800	620	770	650	22
LVC-0800	800	20	14	65	62	58	M12	13	20	900	720	870	750	24
LVC-0900	900	20	14	65	62	58	M12	13	20	1000	820	970	850	24
LVC-1000	1000	20	14	65	62	58	M12	13	20	1100	920	1070	950	26
LVC-1200	1200	26	18	69	67	61	M16	17.5	25	1300	1085	1265	1130	30
LVC-1400	1400	26	18	69	67	61	M16	17.5	25	1500	1285	1465	1330	36
LVC-1600	1600	26	18	84	82	76	M16	17.5	25	1730	1470	1685	1515	42
LVC-1800	1800	26	18	84	82	76	M16	17.5	25	1930	1670	1885	1715	46

Slewing ring made of steel
Angular contact ball bearing type LVC

		Load Ratings kN				Static Moment kNm	
Name	KKØ mm	C_{0a}	C_{0r}	C_a	C_r	C_{0m}	Weight kg
LVC-0100	100	53	25	11	10	1,2	3,70
LVC-0150	150	80	38	13	11	2,8	5,60
LVC-0200	200	155	73	21	18	7,3	7,40
LVC-0250	250	195	92	22	19	11,5	9,20
LVC-0300	300	254	120	28	24	17,9	27,70
LVC-0350	350	296	140	30	26	24,4	32,20
LVC-0400	400	338	159	31	27	31,9	36,70
LVC-0450	450	381	179	33	28	40,3	41,20
LVC-0500	500	636	299	53	46	74,8	63,70
LVC-0600	600	763	359	56	49	107,7	76,20
LVC-0700	700	890	419	60	52	146,6	88,60
LVC-0800	800	1017	479	63	54	191,5	101,10
LVC-0900	900	1144	538	65	57	242,3	113,60
LVC-1000	1000	1277	601	68	59	300,5	126,00
LVC-1200	1200	1531	720	73	63	432,4	192,60
LVC-1400	1400	1791	843	77	67	590,1	224,70
LVC-1600	1600	2045	962	81	70	770,1	389,00
LVC-1800	1800	2305	1085	85	73	976,4	437,40

Slewing ring made of steel
Angular contact ball bearing type LVC

Rotational resistance

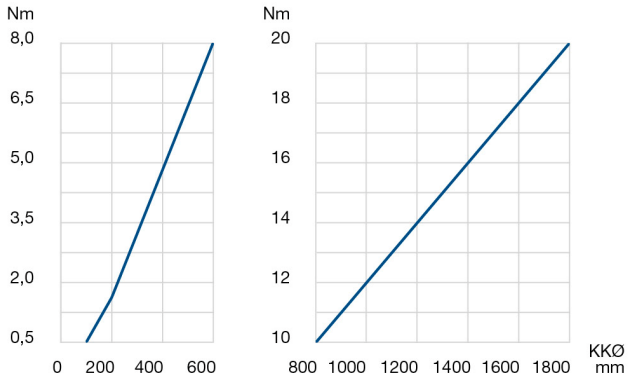

Radial and axial runout accuracy

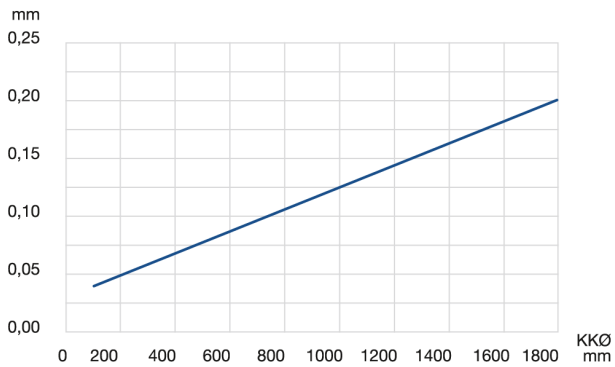

Innovation in Motion

Franke

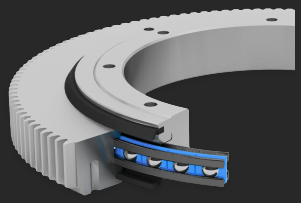

Slewing ring made of steel
Ball bearing type LVD

Characteristics

Smooth running	●●●
Resilience	●●●●
Speed	●●●●
Stiffness	●●●
Weight	●●●
Price	●●●

Technical Data

Material

Outer ring: 42CrMo4V
Inner ring: C45N
Ball race rings: hardened and tempered chrome-silicon steel
Rolling element: hardened rolling bearing steel
Cage: polyamide or thermoplastic polyurethane
Sealing: NBR

Gearing

DIN 3967, quality 8e25, straight toothed, module see table below

Operating temperature

-20 °C to +80 °C, short-term up to +100 °C

Peripheral speed

Max. 5 m/s, without seal max. 10 m/s

Lubricant

Shell Gadus S3 V220 C2

Relubrication

Via grease nipples to DIN 3405

Slewing ring made of steel
Ball bearing type LVD

Dimensions and Data Tables

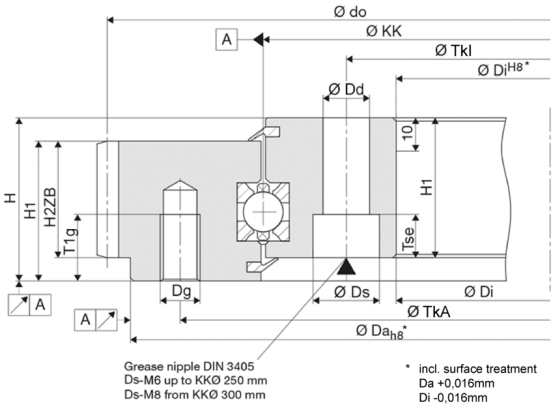

		Dimensions mm													Fastening per Ring
Name	KKØ mm	Ds	Dd	H	H1	H2ZB	Dg	Tse	T1g	Da_{h8}	Di^{H8}	TkA	TkI	do	
LVD-0100	100	11	6.6	34	27	22	M6	6.8	10	150	50	135	65	160	6
LVD-0150	150	11	6.6	34	27	22	M6	6.8	10	200	100	185	115	210	6
LVD-0200	200	11	6.6	34	27	22	M6	6.8	10	250	150	235	165	260	8
LVD-0250	250	11	6.6	34	27	22	M6	6.8	10	300	200	285	215	320	10
LVD-0300	300	15	9	38	31	22	M8	9	15	360	240	340	260	372	12
LVD-0350	350	15	9	38	31	26	M8	9	15	410	290	390	310	423	14
LVD-0400	400	18	11	44	37	32	M10	11	15	470	330	445	355	483	14
LVD-0450	450	18	11	44	37	32	M10	11	15	520	380	495	405	534	14
LVD-0500	500	20	14	49	42	35	M12	13	20	580	420	550	450	594	14
LVD-0600	600	20	14	49	42	35	M12	13	20	680	520	650	550	693	16
LVD-0700	700	20	14	53	45	38	M12	13	20	790	610	750	650	808	22
LVD-0800	800	20	14	53	45	38	M12	13	20	890	710	850	750	920	24
LVD-0900	900	20	14	53	45	38	M12	13	20	990	810	950	850	1020	24
LVD-1000	1000	20	14	53	45	38	M12	13	20	1090	910	1050	950	1120	26
LVD-1200	1200	26	18	60	52	44	M16	17.5	25	1300	1100	1265	1135	1320	30
LVD-1400	1400	26	18	60	52	44	M16	17.5	25	1500	1300	1465	1335	1520	36
LVD-1600	1600	26	18	90	82	69	M16	17.5	25	1730	1470	1685	1515	1752	42
LVD-1800	1800	26	18	90	82	69	M16	17.5	25	1930	1670	1885	1715	1956	46

Slewing ring made of steel
Ball bearing type LVD

Innovation in Motion

Franke

		Load Ratings kN				Static Moment kNm	Gearing		
Name	KKØ mm	C_{0a}	C_{0r}	C_a	C_r	C_{0m}	Module m	Number of teeth	Weight kg
LVD-0100	100	54	25	18	15	1,3	2	80	3,50
LVD-0150	150	82	39	21	18	2,9	2	105	5,00
LVD-0200	200	110	52	23	20	5,2	2	130	6,70
LVD-0250	250	138	65	25	22	8,1	2	160	8,40
LVD-0300	300	168	79	27	24	11,9	3	124	14,10
LVD-0350	350	196	92	29	25	16,2	3	141	16,50
LVD-0400	400	419	197	51	44	39,5	3	161	26,00
LVD-0450	450	477	225	54	47	50,5	3	178	29,20
LVD-0500	500	530	250	56	49	62,4	3	198	42,40
LVD-0600	600	636	299	60	52	89,8	3	231	50,80
LVD-0700	700	742	349	64	55	122,2	4	202	73,00
LVD-0800	800	848	399	67	58	159,6	5	184	83,20
LVD-0900	900	954	449	70	60	202,0	5	204	93,60
LVD-1000	1000	1065	501	73	63	250,5	5	224	104,00
LVD-1200	1200	1677	789	94	81	473,4	5	264	158,50
LVD-1400	1400	1956	920	99	86	644,3	5	304	184,90
LVD-1600	1600	1984	933	140	121	747,1	6	292	430,60
LVD-1800	1800	2234	1050	146	126	946,0	6	326	484,20

Slewing ring made of steel
Ball bearing type LVD

Rotational resistance

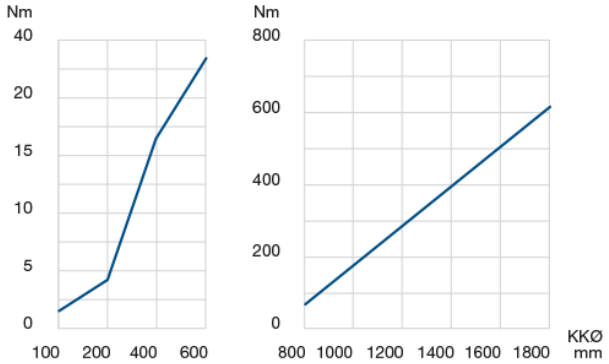

Radial and axial runout accuracy

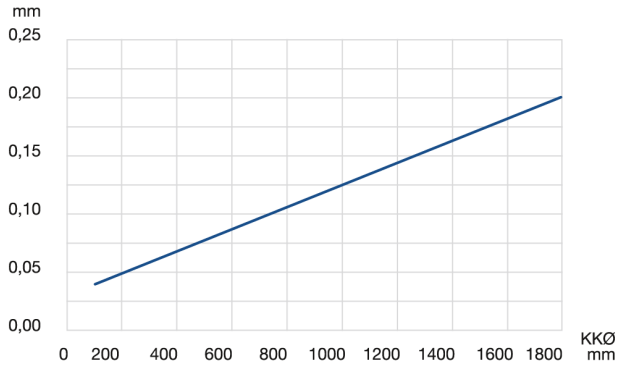

Innovation in Motion

Franke

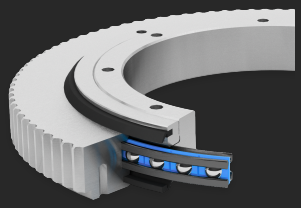

Slewing ring made of aluminium
Ball bearing type LVE

Characteristics

Smooth running	●●●
Resilience	●●●●
Speed	●●●●
Stiffness	●●●
Weight	●●●●●
Price	●●●

Technical Data

Material

Inner / Outer ring: aluminium, anodized
Ball race rings: hardened and tempered chrome-silicon steel
Rolling element: hardened rolling bearing steel
Cage: polyamide or thermoplastic polyurethane
Sealing: NBR

Gearing

AT10

Operating temperature

-20 °C to +80 °C, short-term up to +100 °C

Peripheral speed

Max. 5 m/s, without seal max. 10 m/s

Lubricant

Shell Gadus S3 V220 C2

Relubrication

Via grease nipples to DIN 3405

Slewing ring made of aluminium
Ball bearing type LVE

Dimensions and Data Tables

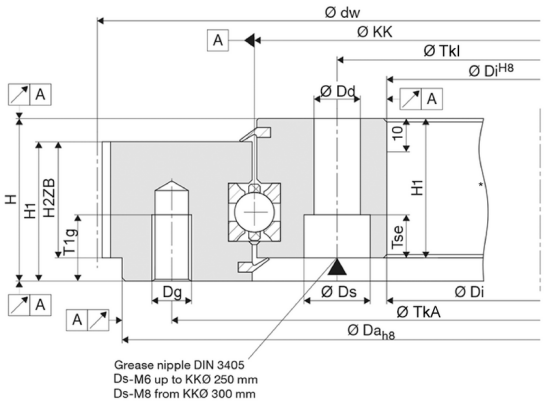

		Dimensions mm												Fastening per Ring
Name	KKØ mm	Ds	Dd	H	H1	H2ZB	Dg	Tse	T1g	Da_{h8}	Dl^{H8}	TkA	Tkl	
LVE-0100	100	11	6.6	34	27	22	M6	6.8	10	150	50	135	65	6
LVE-0150	150	11	6.6	34	27	22	M6	6.8	10	200	100	185	115	6
LVE-0200	200	11	6.6	34	27	22	M6	6.8	10	250	150	235	165	8
LVE-0250	250	11	6.6	34	27	22	M6	6.8	10	300	200	285	215	10
LVE-0300	300	15	9	38	31	26	M8	9	15	360	240	340	260	12
LVE-0350	350	15	9	38	31	26	M8	9	15	410	390	390	310	14
LVE-0400	400	18	11	44	37	32	M10	11	15	470	330	445	355	14
LVE-0450	450	18	11	44	37	32	M10	11	15	520	380	495	405	14
LVE-0500	500	20	14	49	42	35	M12	13	20	580	420	550	450	14
LVE-0600	600	20	14	49	42	35	M12	13	20	680	520	650	550	16
LVE-0700	700	20	14	53	45	38	M12	13	20	790	610	750	650	22
LVE-0800	800	20	14	53	45	38	M12	13	20	890	710	850	750	24
LVE-0900	900	20	14	53	45	38	M12	13	20	990	810	950	850	24
LVE-1000	1000	20	14	53	45	38	M12	13	20	1090	910	1050	950	26
LVE-1200	1200	26	18	60	52	44	M16	17.5	25	1300	1100	1265	1135	30
LVE-1400	1400	26	18	60	52	44	M16	17.5	25	1500	1300	1465	1335	36
LVE-1600	1600	26	18	90	82	69	M16	17.5	25	1730	1470	1685	1515	42
LVE-1800	1800	26	18	90	82	69	M16	17.5	25	1930	1670	1885	1715	46

Slewing ring made of aluminium
Ball bearing type LVE

Innovation in Motion

Franke

		Load Ratings kN				Static Moment kNm	Effective Circle Diameter mm		
Name	KKØ mm	C_{0a}	C_{0r}	C_a	C_r	C_{0m}	AT10	z	Weight kg
LVE-0100	100	54	25	18	15	1,3	165.52	52	1,20
LVE-0150	150	82	39	21	18	2,9	216.45	68	1,80
LVE-0200	200	110	52	23	20	5,2	264.2	83	2,50
LVE-0250	250	138	65	25	22	8,1	324.68	102	3,00
LVE-0300	300	168	79	27	24	11,9	378.79	119	5,00
LVE-0350	350	196	92	29	25	16,2	429.72	135	5,80
LVE-0400	400	419	197	51	44	39,5	490.2	154	9,50
LVE-0450	450	477	225	54	47	50,5	541.13	170	10,70
LVE-0500	500	530	250	56	49	62,4	598.42	188	15,10
LVE-0600	600	636	299	60	52	89,8	700.28	220	18,20
LVE-0700	700	742	349	64	55	122,2	814.87	256	25,90
LVE-0800	800	848	399	67	58	159,6	929.47	292	29,60
LVE-0900	900	954	449	70	60	202,0	1028.14	323	33,30
LVE-1000	1000	1065	501	73	63	250,5	1126.82	354	37,00
LVE-1200	1200	1677	789	94	81	473,4	1330.54	418	59,90
LVE-1400	1400	1956	920	99	86	644,3	1527.89	480	69,90
LVE-1600	1600	1984	933	140	121	747,1	1763.44	554	161,00
LVE-1800	1800	2234	1050	146	126	946,0	1967.16	618	181,10

Slewing ring made of aluminium
Ball bearing type LVE

Rotational resistance

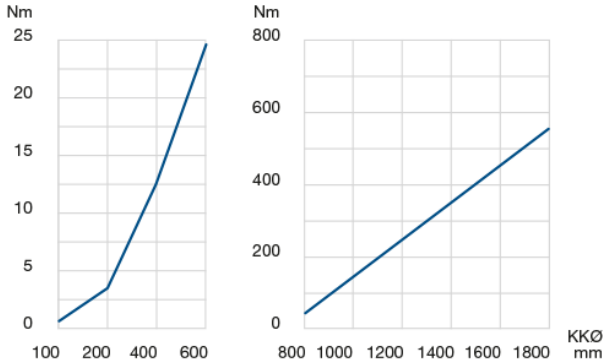

Radial and axial accuracy

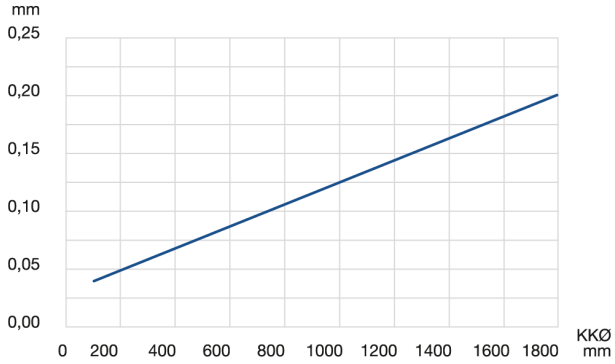

Innovation in Motion

Franke

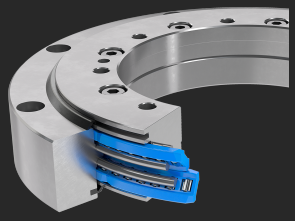

Slewing ring made of aluminium Angular contact roller bearing type LVG

Characteristics

Smooth running	●●●●●
Resilience	●●●●●
Speed	●●●
Stiffness	●●●●●
Weight	●●●●
Price	●●

Technical Data

Material

Inner / Outer ring: aluminium, anodized
Ball race rings: hardened and tempered chrome-silicon steel
Rolling element: hardened rolling bearing steel
Cage: polyamide or thermoplastic polyurethane
Sealing: NBR

Operating temperature

-20 °C to +80 °C, short-term up to +100 °C

Peripheral speed

Max. 4 m/s

Lubricant

Isoflex Topas NCA52

Relubrication

Via grease nipples to DIN 3405

Slewing ring made of aluminium
Angular contact roller bearing type LVG

Dimensions and Data Tables

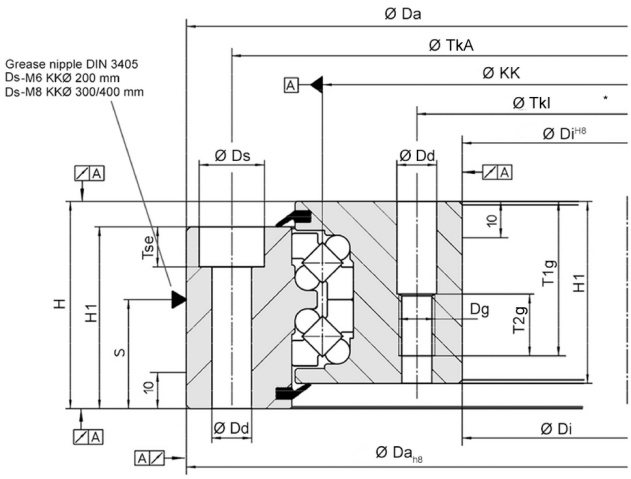

		Dimensions mm												Fastening per Ring
Name	KKØ mm	Ds	Dd	H	H1	Dg	Tse	T1g	T2g	Da_{h8}	Di^{H8}	TkA	Tkl	
LVG-0200	200	15	9	47	40	M8	9	35	15	262	140	243	159	8
LVG-0300	300	18	11	57	50	M10	11	43	17	375	223	350	248	14
LVG-0400	400	18	11	57	50	M10	11	43	17	475	323	450	348	14

		Load Ratings kN				Static Moment kNm	
Name	KKØ mm	C_{0a}	C_{0r}	C_a	C_r	C_{0m}	Weight kg
LVG-0200	200	309	124	39	36	12,4	4,10
LVG-0300	300	617	247	78	72	37,1	9,30
LVG-0400	400	827	331	90	83	66,2	12,40

Slewing ring made of aluminium
Angular contact roller bearing type LVG

Rotational resistance

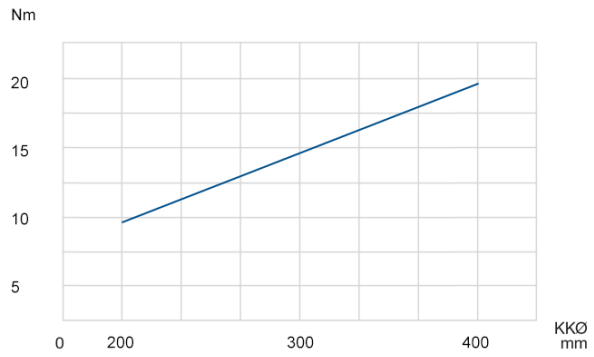

Radial and axial runout accuracy

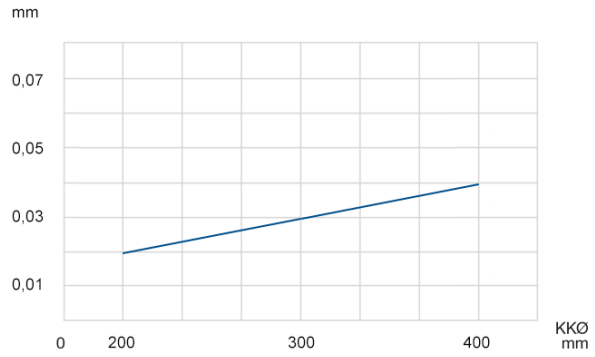

Innovation in Motion

Franke

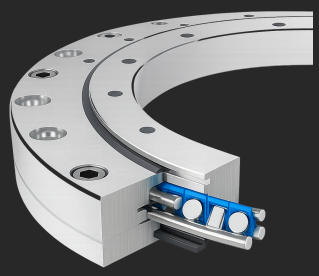

Slewing ring made of aluminium
Roller bearing type LVW

Description

Franke slewing rings of type LVW are suitable for medium rotational speeds and accuracies. They stand out with smooth running even under high moment loads, high rigidity, and low weight thanks to the aluminium construction.

The crossed roller arrangement absorbs high loads from all directions. Slewing rings of type LVW are insensitive to shocks and vibrations. Unlike a bearing element, the LVW comes as a fully pre-assembled unit: inner and outer ring made of anodised aluminium with ready-made mounting holes. This allows it to be bolted directly between two components, without the need for a separate adjacent construction.

Characteristics

Smooth running	●●●●
Accuracy	●●●●
Speed	●●●
Stiffness	●●●●●
Assembly	●●
Price	●●●

Technical Data

Material

Inner/outer ring: aluminium, anodised
Ball raceways: hardened and tempered chromium-silicon steel
Rolling elements: hardened bearing steel
Cage: polyamide or thermoplastic polyurethane
Seal: NBR

Operating temperature

–30 °C to +80 °C, up to +100 °C for short periods

Peripheral speed

Max. 2 m/s

Lubricant

Shell Gadus S3 V220 C2

Relubrication

Via grease nipple in accordance with DIN 3405

Slewing ring made of aluminium
Roller bearing type LVW

Dimensions and Data Tables

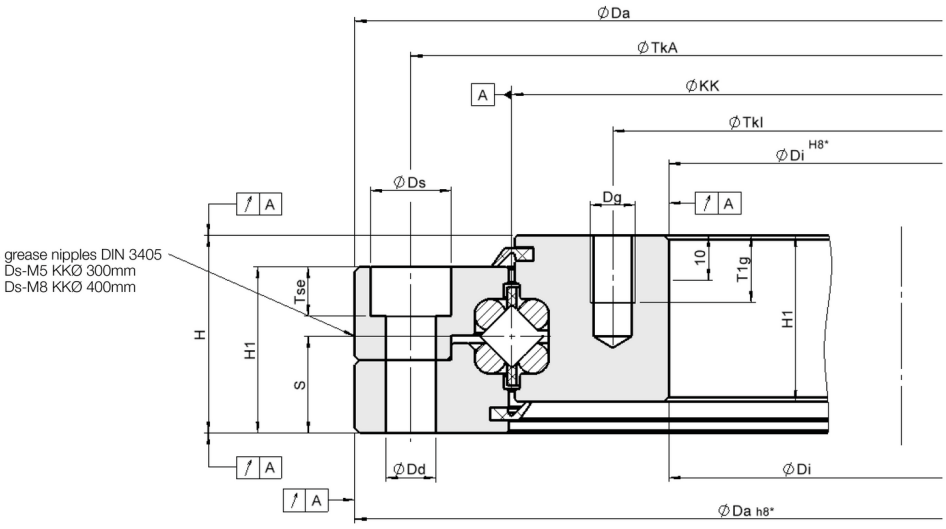

* incl. surface treatment
Da +0,016mm
Di -0,016mm

		Dimensions mm											Fastening per Ring
Name	KKØ mm	Ds	Dd	H	H1	Dg	Tse	T1g	Da_{h8}	Di^{H8}	TkA	Tkl	
LVW-0200	200	11	6.6	34	27	M6	6.8	10	250	150	235	165	8
LVW-0300	300	15	9	38	31	M8	9	15	360	240	340	260	12
LVW-0400	400	18	11	44	37	M10	11	15	470	330	445	355	14
LVW-0500	500	20	14	49	42	M12	13	20	580	420	550	450	14

		Load Ratings kN				Static Moment kNm	
Name	KKØ mm	C_{0a}	C_{0r}	C_a	C_r	C_{0m}	Weight kg
LVW-0200	200	109	44	41	21	4,4	2,38
LVW-0300	300	164	66	47	25	9,8	4,80
LVW-0400	400	354	141	91	48	28,3	9,40
LVW-0500	500	444	177	99	52	44,4	14,90

Slewing ring made of aluminium
Roller bearing type LVW

Radial and axial runout accuracy

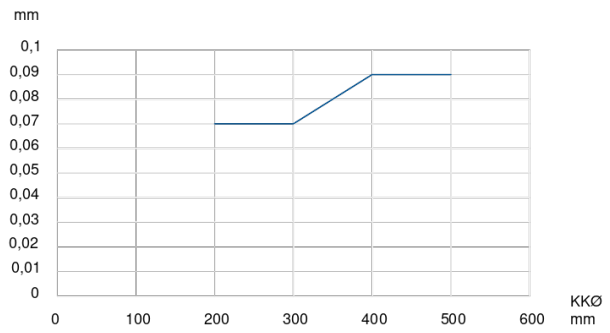

Rotational resistance

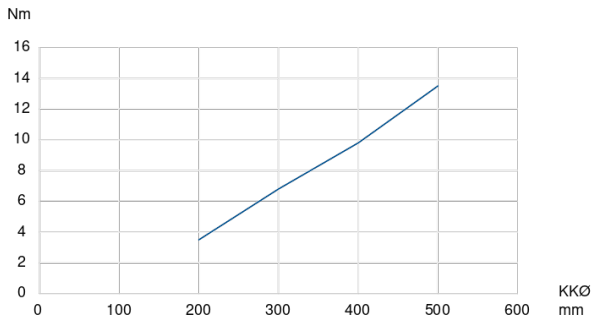

Innovation in Motion

Franke

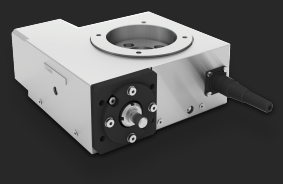

Worm drive
Rotary table type LTA

Characteristics

Accuracy	●●●●
Speed	●●
Ø-Range	●●
Price	●●●●●

Technical Data

Material

Base plate: Aluminium
Housing: V2A
Ball race rings: hardened and tempered chrome-silicon steel
Rolling element: hardened rolling bearing steel
Worm wheel: Wear-resistant bronze alloy
Worm shaft: CK45N hardened and grinded

Operating temperature

-10 °C to +80 °C

Mounting position

Any, preferably horizontal

Lubricant

With bearing grease via grease nipples

Options

Inductive proximity switch, flange/coupling to mount the motor, motorization

Dimensions and Data Tables

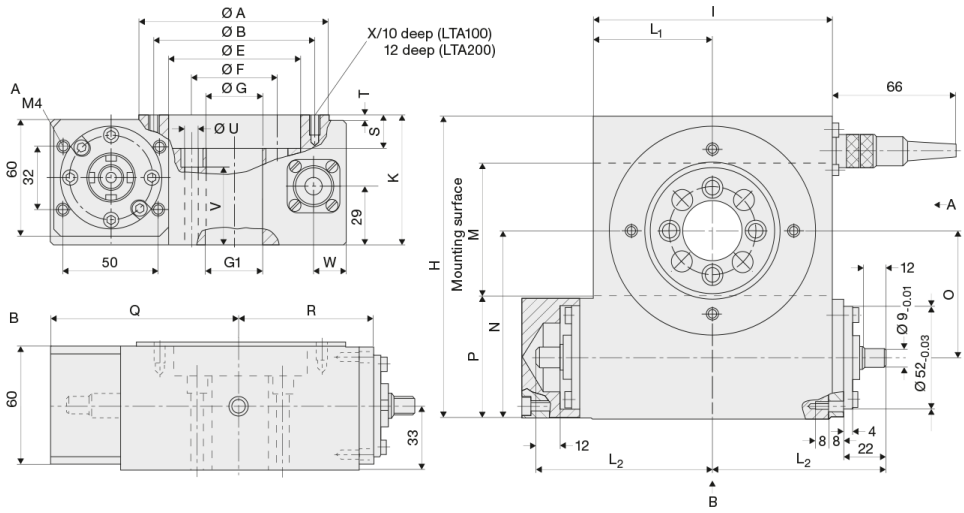

LTA – Table 1

Name	Nominal Diameter mm	Dimensions mm									
	A	B	$ØE^{H7}/_{6\ tief}$	ØF	ØG	$ØG_1^{H7}{}_{12\ tief}$	H	I	K	L_1	L_2
LTA100	100	85	70	45	30	-	155	125	65	0	62.5
LTA200	200	175	160	130	110	-	255	220	70	0	110

LTA – Table 2

Name	Nominal Diameter mm	Load Ratings kN		Dimensions mm										
	A	C_0	C	M	N	P	Q	R	S	T	U	V	W	X
LTA100	100	0	0	70	96	61	99.5	69.5	17	2	4xø6,6	0	17	4xM6
LTA200	200	0	0	165	145.5	63	147	117	22	7	6xø9,0	0	22	6xM8

Worm drive
Rotary table type LTA

LTA – Table 3

Name	Nominal Diameter mm	Tilting Moment Nm	Input Speed U/min	Reduction Ratio	Output Speed U/min	Weight kg
	A	C_{0m}	$N_{1\,max}$	i	$N_{2\,max}$	
LTA100	100	289	1800	18:1	100	5.5
LTA200	200	433	2200	36:1	61	10

Performance Overview			LTA100	LTA200
Reduction Ratio			18:1	36:1
Input Torque	M_{1max}	Nm	5	5
Output Torque	M_{2max}	Nm	54	108
Plan/Runout Accuracy		µm	30	30
Positioning Accuracy		sec	160	120
Repeatability		sec	20	14

Innovation in Motion

Franke

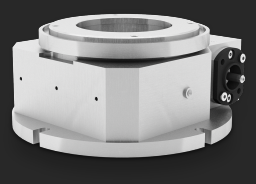

Worm drive
Rotary table type LTB

Characteristics

Accuracy	●●●●●
Speed	●●●
Ø-Range	●●●
Price	●●●●

Technical Data

Material

Housing: Aluminium ribbed
Ball race rings: hardened and tempered chrome-silicon steel
Rolling element: hardened rolling bearing steel
Worm wheel: Wear-resistant bronze alloy
Worm shaft: CK45N hardened and grinded

Operating temperature

-10 °C to +80 °C

Mounting position

Any, preferably horizontal

Lubricant

With bearing grease via grease nipples

Options

Inductive proximity switch, flange/coupling to mount the motor, motorization

Dimensions and Data Tables

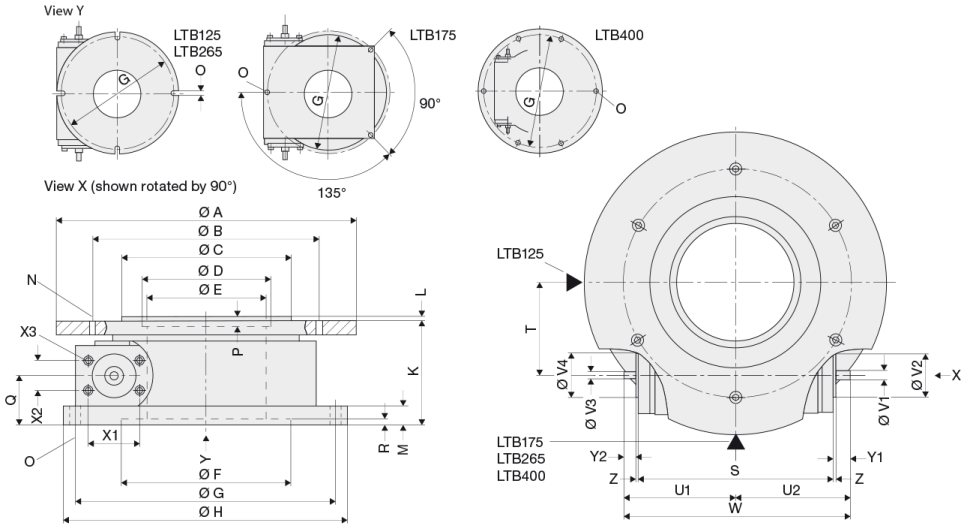

LTB – Table Part 1

Name	Nominal Diameter mm	Dimensions mm										
	A	B	C^{g6}	D^{H7}	E	F^{H7}	G	H	K	L	M	N
LTB125	125	100	-	70	70	100	150	165	75	-	10	4xM5
LTB175	175	126	-	102	70	102	178	-	82	-	12	6xM6
LTB265	265	200	150	-	105	150	230	250	90	-	16	6xM10
LTB400	400	340	300	200	190	270	380	400	100	-	16	6xM10

LTB – Table Part 2

Name	Nominal Diameter mm	Load Ratings kN		Dimensions mm											
	A	C_0	C	O	P	Q	R	S	T	U1	U2	V^1 g6	V^2 g6	V^3 g6	V^4 g6	W
LTB125	125	0	0	4x7,0	5	34	5	112	60	67.5	67.5	0	6	22	6	135
LTB175	175	0	0	3x6,6	4	31	4	152	63	98	98	0	6	52	6	196
LTB265	265	0	0	4x10,0	-	43	5	171	81	95	98	0	8	38	6	193
LTB400	400	0	0	6x11,0	5	43	5	229	139	124	127	0	8	38	6	251

Worm drive
Rotary table type LTB

LTB – Table Part 3

Name	Nominal Diameter mm	Tilting Moment Nm	Input Speed U/min	Reduction Ratio	Output Speed U/min	Weight kg
	A	C_{0m}	$N_{1\,max}$	i	$N_{2\,max}$	
LTB125	125	110	2500	360:1	7	3
LTB175	175	140	2500	360:1	7	6
LTB265	265	310	2500	360:1	7	10
LTB400	400	1780	2500	360:1	7	27

Performance Overview			LTB125	LTB175	LTB265	LTB400
Reduction Ratio			360:1	360:1	360:1	360:1
Input Torque	M_{1max}	Nm	0.7	0.9	1.5	2
Output Torque	M_{2max}	Nm	70	75	160	290
Plan/Runout Accuracy		µm	20	20	20	30
Positioning Accuracy		sec	80	80	70	50
Repeatability		sec	16	14	10	8

Innovation in Motion

Franke

Torque drive
Direct drive Type LTD

Description

Bearing assemblies with direct drive are suitable for applications where high performance and low space requirements are important criteria. The integration of the drive into the bearing housing means that wear-prone assemblies for transmitting drive power, such as toothed belts, shafts or chains, can be dispensed with. This reduces the required drive energy and also benefits more accurate positioning.

Characteristics

Accuracy	●●●●
Speed	●●●●●
Ø-Range	●●●
Price	●●●

Technical Data

Material

C45N (optionally aluminium)

Operating temperature

-10 °C to +80 °C

Mounting position

any

Options

Incremental measurement system, axial cable outlet, control unit including cable, water cooling

Dimensions and Data Tables

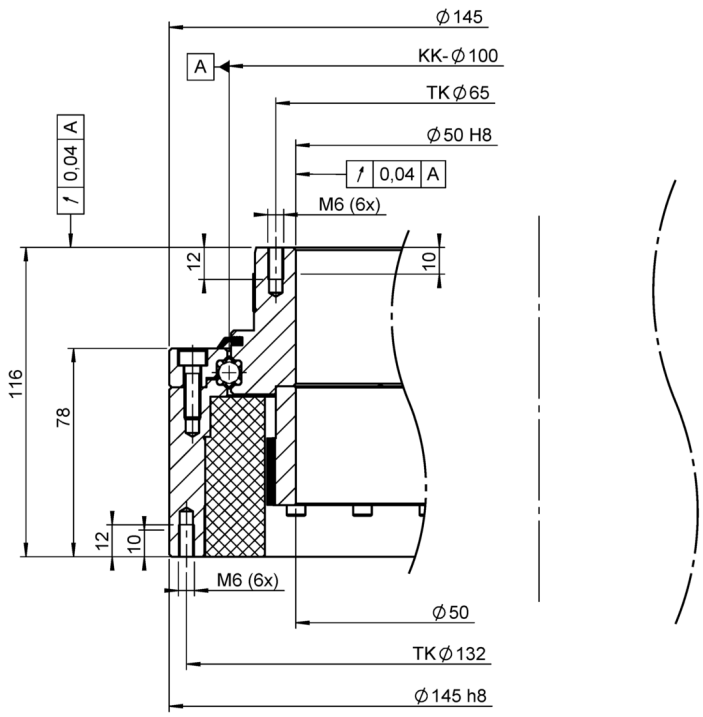

Table 1

Name	□□Ø mm	Load Ratings kN				Torque Nm		Power A		Weight kg
		C_{0a}	C_{0r}	C_a	C_r	M_{Nenn}	M_{Peak}	I_{Nenn}	I_{Peak}	
LTD-0100	100	46	22	17	14	4.5	16	1.8	7	8
LTD-0215	215	128	60	26	22	26.4	105	3.1	12.8	24
LTD-0320	320	382	38.5	45	39	77	329	4.3	21.6	44
LTD-0385	385	458	216	48	41	118	522	4.3	21.7	52

Torque drive
Direct drive Type LTD

Innovation in Motion

Franke

Rated Data

Product	M_{NennLk}	I_{NennLk}	n_{NennLk}	P_{NennLk}	PV_{NennLk}	PG_{NennLk}	M_{HaltLk}	I_{HaltLk}
	Nm	A_{eff}	U/min	W	W	W	Nm	A_{eff}
LTD-0100	4.5	1.8	2140	1005	54	96	3.2	0
LTD-0215	26.4	3.1	640	1770	131	179	18.7	0
LTD-0320	77	4.3	299	2409	230	295	54	0
LTD-0385	118	4.3	193	2386	309	357	83	0

Peak Load Data

Product	M_{Peak}	I_{Peak}	n_{Peak}	P_{Peak}	PV_{Peak}	PG_{Peak}
	Nm	A_{eff}	U/min	W	W	W
LTD-0100	16	7	1130	1897	863	877
LTD-0215	105	12.8	320	3526	2236	2253
LTD-0320	329	21.6	126	4343	5886	5904
LTD-0385	522	21.7	74	4049	7876	7889

Performance Overview

Product	k_t	k_e	k_e	k_m	n_{Leer}	f_{max}	U_{zk}	R_{Ph20}
	Nm/A_{eff}	V_{eff}/(rad/s)	V_{eff}/(U/min)	Nm/vW	U/min	Hz	VDC	Ω
LTD-0100	0.459	1.577	0.165	0.459	2390	398	560	4.419
LTD-0215	1.973	5.2	0.545	1.973	727	254	560	3.457
LTD-0320	4.483	11.094	1.162	4.483	340	159	560	3.206
LTD-0385	6.25	16.694	1.748	6.25	226	124	560	4.235

Measurement System

Product	Measurement Principle	Cable Length	Division Period	Line Count	Power Supply	Electrical Connection
LTD-0100	induktiv	3	1000	256	3,6V bis 14V DC	Kupplung M12
LTD-0215	induktiv	3	1000	660	3,6V bis 14V DC	Kupplung M12
LTD-0320	induktiv	3	1000	900	3,6V bis 14V DC	Kupplung M12
LTD-0385	induktiv	3	1000	1200	3,6V bis 14V DC	Kupplung M12

Torque drive
Direct drive Type LTD

Speed-Power-Graph

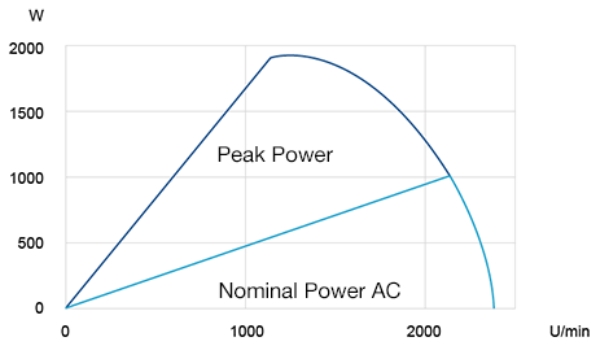

Speed-Torque-Graph

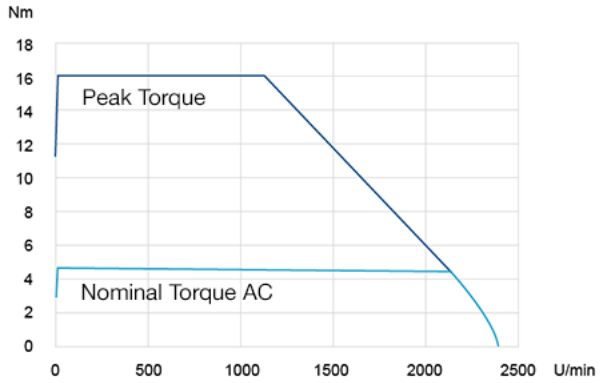

Stator Iron Losses

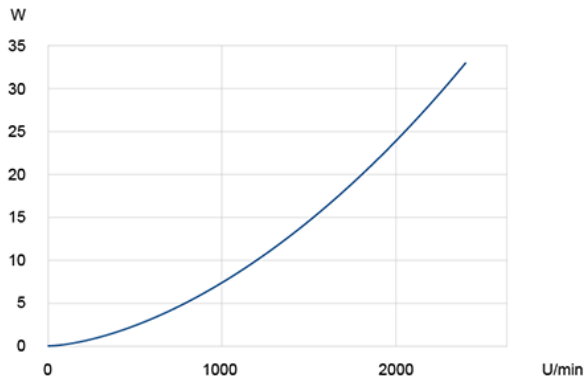

Rotor Losses

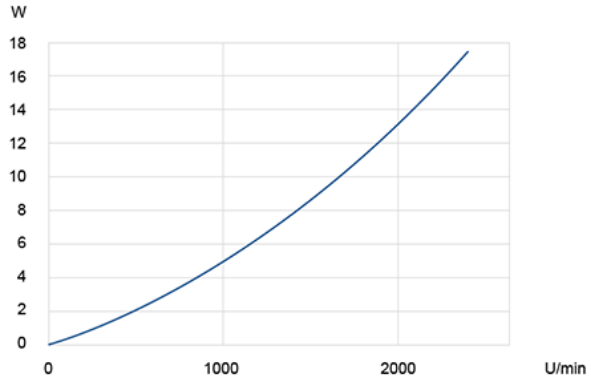

Current-Torque-Graph

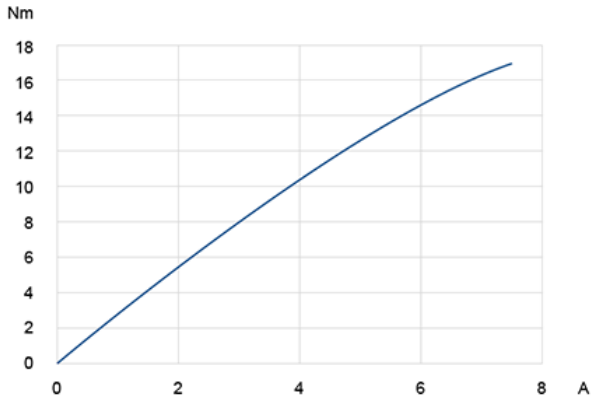

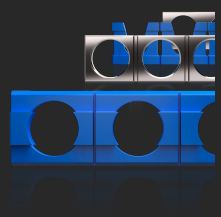

Accessories
Cages

Description

Cages are supplied in the required lengths. The number of segments varies depending on the bearing diameter and type. For special requirements, we offer custom cage designs made of materials such as PEEK, Teflon, brass, or stainless steel.

Dimensions and Data Tables

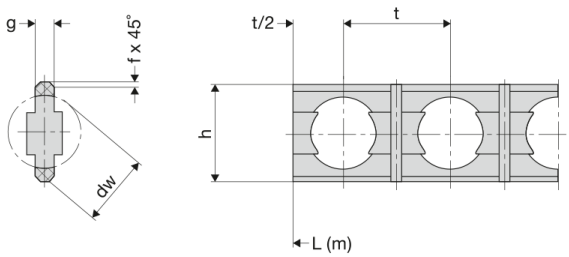

Accessories
Washers

Description

Bei größeren Wälzlagern und Lagerelementen wird das Abstimmen durch Beilagen zwischen den geteilten Innen- oder Außenringen vereinfacht. Die Abstimmbeilagen bestehen aus Niro-Stahlblech. Für die Abstimmung empfiehlt es sich, einen theoretischen Anfangsspalt von 0,5 mm in der Konstruktionsauslegung vorzusehen.

Dimensions and Data Tables

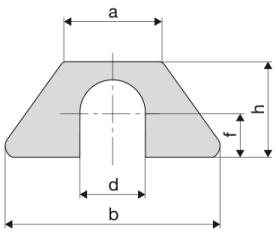

Accessories
Seals

Description

To ensure reliable operation, dust seals are typically used to protect rotary unions and bearings. For more demanding requirements regarding the seal and its sealing performance—for example, for applications involving higher temperatures, vacuum, aggressive media, or exposure to water—we offer specialized sealing solutions.

Dimensions and Data Tables

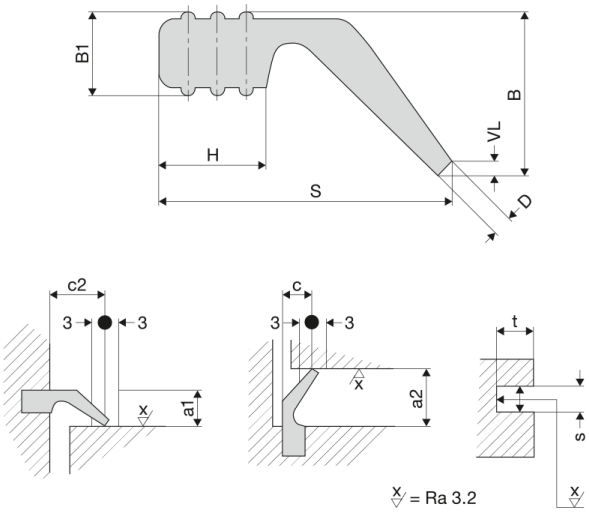

Technical Information on Wire Race Bearings

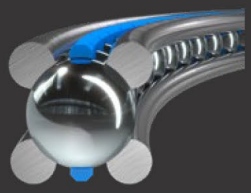

Bearings Elements and Slim Bearings | Bearing Assemblies | Rotary Tables and Direct Drive

1 Wire race bearing selection

An optimum selection or dimensioning of the bearing should be made before the design work is started. The individual series offer the following advantages:

- Bearing elements (Type LEL, LER):
  - highest possible degree of integration
  - cost-sensitive series applications
  - greatest possible flexibility with regard to preload, running properties and diameter ranges

- Slim bearings (Type LSA):
  - simple, space-saving integration into your construction
  - Low-cost alternative to conventional slim bearings
  - non-preloaded bearings
  - rather subordinate quality requirements regarding accuracy and play

- Bearing assemblies (Type LVA, LVB, LVD, LVE):
  - ready-to-install standard bearings with a wide selection range
  - backlash-free preloaded (optimized with regard to stiffness, speed and service life)
  - short-term availability (partly from stock)

- Bearing assemblies (Type LVC, LVG):
  - ready-to-install standard bearing for high rotational speeds (LVC)
  - ready-to-install standard bearing for high loads (LVG)

- Rotary tables (Type LTA, LTB):
  - robust rotary table with worm drive for fast moving handling and positioning tasks (LTA)
  - rotary table with worm drive for high-precision measuring and positioning tasks (LTB)

- Bearing assemblies with direct drive (Type LTD):
  - Rotary joint with integrated torque motor for energy-efficient, highly dynamic movements

1.1 Parameters for bearing selection

- permissible dimensions and material information of the bearing
- loads with load spectra and associated time shares in %
- speed/number of swivel movements and angles per time unit
- peripheral forces to be transmitted by the gearing
- operating conditions (temperature, vacuum, clean room, humidity)
- required bearing life in revolutions or operating hours

1.2 Static and dynamic load capacity - Calculation

The basic static and dynamic load ratings stated in the catalogue are only sufficient for preliminary design. The basic load ratings shown correspond to the radial load ratings. The static axial and radial load carrying capacities or the dynamic axial and radial load carrying capacities are required for an optimum design. For more complex loads, please contact our technical sales department.

2 Calculation

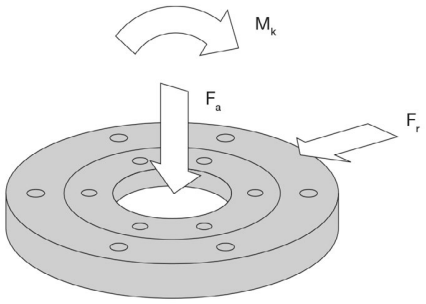

All forces and moments acting on the bearing are to be combined by vectorial addition into centrically acting forces Fa and Fr and resulting moments Ma. For complex load cases and load spectra with variable loads and speeds, we will be pleased to calculate the values for you.

2.1 Terms, unit of measurement

C	dynamic load rating	(N)
C_0	static load rating	(N)
F_a	centrically acting axial force	(N)
F_r	centrically acting radial force	(N)
KKØ	ball and cage diameter = (D + d)/2	(M)
L_n	nominal lifetime	(h)
M_k	tilting moment	(Nm)
n	rotational speed	(min – 1)
P	equivalent dynamic load	(N)
P_0	equivalent static load	(N)
S_{st}	static safety	
X	radial factor	
Y	axial factor	
Z	moment factor	

2.2 Static calculation

A static calculation is sufficient if the bearing is loaded at standstill. A bearing with sufficient load carrying capacity has been selected if the recommended static safety is achieved.

$$S_{st} = \frac{1}{\frac{F_a}{C_{oa}} + \frac{F_r}{C_{or}} + \frac{M}{C_{om}}}$$

2.2.1 Axial and radial factors

	X_0	Y_0
All bearing types	1,0	0,47

2.2.2 Recommended static safety S_{st}

ball diameter > 6	S_{st}
For quiet, vibration-free operation	> 1,8
For normal operation	> 2,5
For heavy impact loads and high demands on running accuracy	> 8,0

2.3 Dynamic calculation

At a circulation speed of v > 0.1 m/s, a static and dynamic calculation is required, whereby the static safety factor S_{st} must at least reach the recommended value of the respective load.

2.3.1 Nominal lifetime

$$L_h = \left(\frac{C}{P}\right)^3 \cdot \frac{10^6}{60 \cdot N} \quad \text{(h)}$$

2.3.2 Axial and radial loads

$$P = X \cdot FR + Y \cdot F_a \quad \text{(N)}$$

	$\frac{F_a}{F_r} \geq 1$		$\frac{F_a}{F_r} > 1$	
	X	Y	X	Y
All bearing types	1,26	0,45	0,86	0,86

2.3.3 Axial and moment load and axial load with $F_r = 0$, $M_k = 0$

$$P = Y \cdot F_a + Z \cdot \frac{M_k}{KKØ} \quad \text{(N)}$$

	$0 < \frac{M_k}{F_a \cdot KKØ} \leq 0{,}5$		$\frac{M_k}{F_a \cdot KKØ} \leq 0{,}5$	
	Y	Z	X	Z
All bearing types	0,86	1,72	0,45	2,54

2.3.4 Radial and moment load and radial load with $F_a = 0$, $M_k = 0$

$$P = X \cdot F_r + Z \cdot \frac{M_k}{KKØ} \quad \text{(N)}$$

	$0 \geq \frac{M_k}{F_r \cdot KKØ} \leq 0{,}5$		$\frac{M_k}{F_r \cdot KKØ} \geq 0{,}5$	
	X	Z	X	Z
All bearing types	1,0	1,68	0,86	1,96

For radial, axial and moment loads, we will be pleased to carry out the calculation for you.

3 Calculation example bearing elements

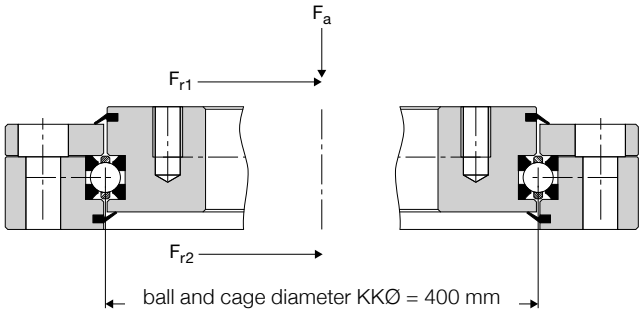

3.1 Load details:

Load case A (static stress)

Centric axial force from

Tare weight + load	F_a = 22 kN
Radial force from working pressure	F_{r1} = 4,2 kN

Load case B (dynamic stess)

Centric axial force from

Tare weight + load	F_a = 22 kN
Radial force from drive	F_{r2} = 1,5 kN
Average operating speed	n = 9,5 1/min

Calculation for bearing element LER5 with KKØ 400 mm.
Details: $C0_a$ = 419 kN und $C0_r$ = 197 kN

3.2 Calculation:

Load case A (static stress)

$$S_{st} = \frac{1}{\frac{F_a}{C_{oa}} + \frac{F_r}{C_{or}} + \frac{M}{C_{om}}} = \frac{1}{\frac{22}{419} + \frac{4,2}{197} + \frac{-}{-}} = 13,5$$

Safety S_{st} = 13,5 (sufficient for normal operation)

Load case B (dynamic stress)

$$S_{st} = \frac{1}{\frac{F_a}{C_{oa}} + \frac{F_r}{C_{or}} + \frac{M}{C_{om}}} = \frac{1}{\frac{22}{419} + \frac{1,5}{197} + \frac{-}{-}} = 16,6$$

Safety S = 9,5 (above the minimum security level specified in 2.2.2)

Lifetime L_h = $\left(\frac{44}{20,2}\right)^3 \cdot \frac{10^6}{60 \cdot 9,5}$ = 18.100 h

(P = 0,86 · 1,5 kN + 0,86 · 22 kN = 20,2 kN)

4 Design and manufacture of the bearing bed

Bearing elements consist of two inner and outer raceways and a multi-piece segmented cage with balls. The races are open and can therefore be changed elastically in diameter for installation.

The balls correspond to class G20 (DIN 5401:2002-08). Only the balls included in the delivery may be used. If balls are lost, all balls must be replaced in order not to impair the running characteristics of the bearing.

The design and technically optimum production as well as the correct setting of the preload are important prerequisites for a long service life. This guarantees that all raceways are involved in load carrying and that the balls roll optimally in the predetermined position.

Design and manufacture of the wire bed differ for the individual bearing elements and slim bearings and are described below for these.

4.1 Wire bed design for bearing elements Type LEL

The bearing elements LEL offer the highest running culture and running accuracy. They also place the highest demands on the design of the wire bed. Two dimensional sketches illustrate the most important parameters here:

4.4.1 Tuning by grinding (Massive tuning)

When designing the enclosing parts, care must be taken that the two housing parts to be joined are manufactured with oversize in order to achieve the desired preload in the bearing by grinding the cover.

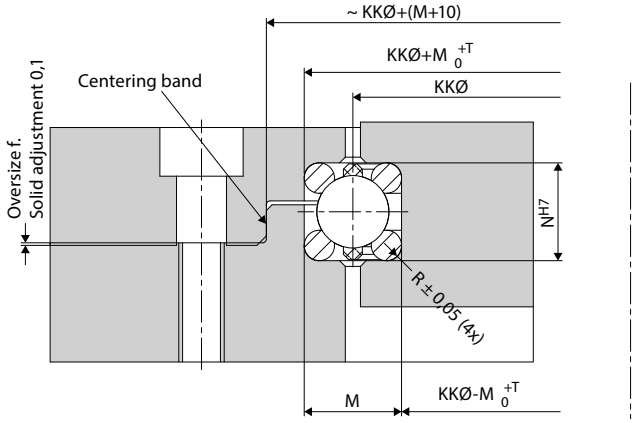

4.1.2 Adjustment with shims

When designing the enclosing parts, it must be ensured that the two housing parts to be joined are undersized so that the desired preload in the bearing can be achieved by enclosing shims.

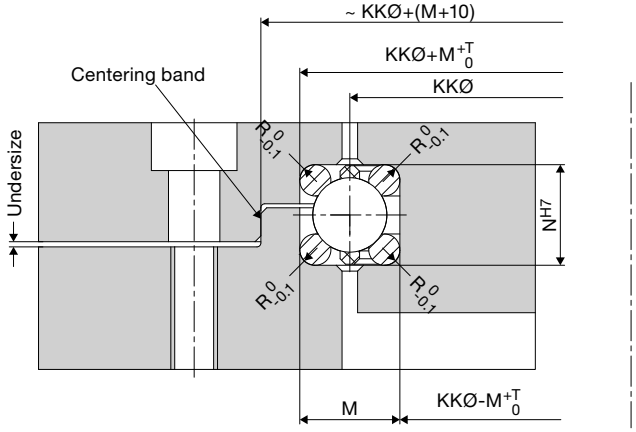

4.1.3 Adjustment with threaded ring

In this case the use of LER bearing elements is recommended. The wire bed diameters can be manufactured in one piece, then the bearing setting is adjusted by screwing in the threaded ring. This must be secured by means of a set screw after correct bearing adjustment.
With LEL bearing elements, the threaded ring must be fitted with a race to ensure sufficient concentricity.

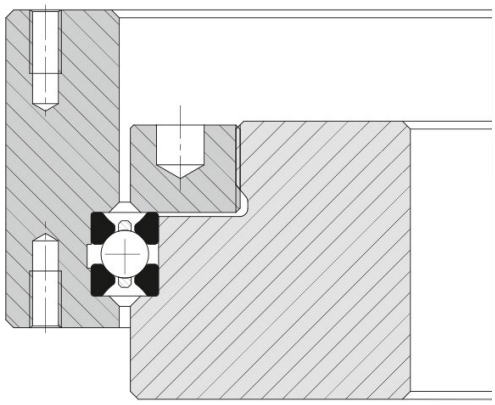

4.1.4 Dimensions and tolerances

The dimensions and tolerances are calculated as follows:

$$R = \frac{\lambda}{2} - 0{,}1$$

T = KKØ / 10.000 (dimensions in mm)

Grinding oversize or undersize for shims: 0.1 mm
Fitting tolerance centering fit

bore:	lower tolerance:	+0,05;
	upper tolerance:	+0,05 + IT6
shaft:	upper tolerance:	–0,05;
	lower tolerance:	–0,05 – IT6

It is advisable to design the stator of the bearing in a split design. The rotor should be made in one piece. The accuracy to be achieved is influenced by the individual accuracies, therefore it applies that split rings 2⁄3 receive the runout/ axial runout tolerances, the one-piece ring receives half of the runout/axial runout tolerances.

Half the diameter tolerance applies to the roundness of the wire bed. The screw mounting surface of the adjacent construction is the basis for the axial runout of the wire bed. The basis for radial runout is the wire bed centre line. Flatness and parallelism of the individual parts are designed with half the total tolerance.

When designing the enclosing parts, it must be ensured that parallel surfaces that are not joined (e.g. surface above the centring collar) are designed with sufficient clearance so that they still have clearance after the bearing has been adjusted. Chamfers and radii at the fit must be designed in such a way that the joining surfaces can be screwed together without causing collisions in the area of the cylinder edges.

Basically, it can be said that the accuracy of the bearing assembly can be improved if the wire bed of the split ring is manufactured when both rings are bolted and additionally pinned. In general, the locating fit of the bearing together with the wire bed can also be machined in one clamping. It is sufficient to manufacture the wire bed by turning or milling, in this case surface qualities of < Ra 3.2 should be aimed for, since the setting behaviour of the bearing is positively influenced by high surface quality.

The wire bed should always be machined in one setting with the contours that are related to the centering or running accuracy, thus achieving optimum accuracy and bearing life.

For soft materials such as aluminum, we recommend protecting the wire bed against wear (e.g. by anodizing, chemical nickel plating, etc.). The layer thickness should not be less than 20µm.

4.2 Wire bed design for bearing elements Type LER
The bearing elements LER offer a significant simplification compared to the LEL series with regard to the production of the enclosing turned parts. Here it is possible to adjust the bearing using a simple cover plate and shims. The wire bed does not have to be split - as with the LEL - no centering on the split ring is required.

Even in the case of the design with cover, care must be taken when designing the enclosing parts to ensure that the wire bed, which is provided with cover, is manufactured with undersize in order to be able to achieve the desired preload in the bearing by enclosing shims.

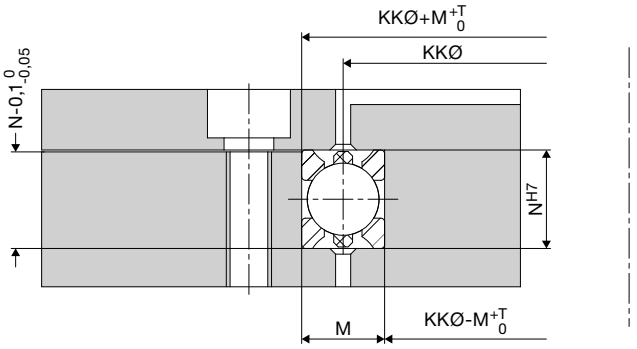

The statements made in the section for LEL apply to the constructive design. The wire bed has no radii to accommodate the race, but the tool radii must not exceed 0.2 mm.

T = KKØ/10.000 (dimensions in mm)
Undersize for shims: 0,1 mm

It makes sense to design the stator of the bearing divided, the rotor should be one piece. The accuracy to be achieved is influenced by the individual accuracies. However, since the wire bed of the split ring also has no offset in concentricity, the concentricity and axial runout tolerances are divided equally between the two rings.

Half the diameter tolerance applies for the roundness of the wire bed, the screw mounting surface of the adjacent construction is the basis for the axial runout of the wire bed. The basis for radial runout is generally the wire bed centre line.

Flatness and parallelism of the individual parts are designed with half the total tolerance. The locating fit of the bearing is to be machined together with the wire bed in one clamping.

It is sufficient to produce the wire bed by turning or milling. Surface qualities of < Ra 3.2 should be aimed for here, since the setting behaviour of the bearing arrangement is positively influenced by high surface quality.

4.3 Wire bed design for bearing elements Type LEW
For the design of wire rod beds of bearing element series LEW, the same guidelines apply accordingly as for bearing elements of series LEL.
When ordering the bearing elements, it is absolutely necessary to specify which bearing ring will be manufactured split.

4.4 Wire bed design for slim bearing Type LSA
In contrast to the bearing elements described above, the bearing elements LSA are not adjustable and are always subject to play. According to the following specifications, the resulting bearing arrangements have play between 0.02 and 0.12 mm. As with the LER, the wire bed is undivided, and adjustment of the play is not possible.

When designing, it makes sense to integrate the outer ring into the split element of the surrounding structure, as this makes it easier to insert the ring into the surrounding structure.

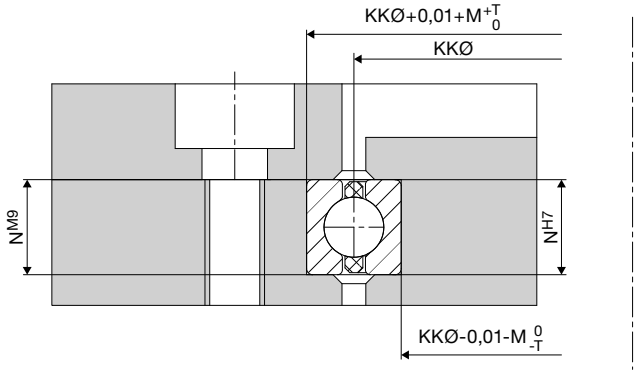

The wire bed has no radii to accommodate the race, but the tool radii must not exceed 0.2 mm. T = 0.03 mm for KK up to 300 | 0.04 mm for KK greater than 300 (mm).

Half the diameter tolerance applies for the roundness of the wire bed, the screw mounting surface of the adjacent construction is the basis for the axial runout of the wire bed. The basis for radial runout is generally the wire bed centre line.

The locating fit of the bearing must be machined together with the wire bed in one clamping. It is sufficient to produce the wire bed by turning or milling, in this case surface qualities of < Ra 3.2 should be aimed for, since the setting behaviour of the bearing arrangement is positively influenced by high surface quality.

5 Assembly

5.1 Installation and adjustment of bearing elements

5.1.1 Adjustment with shims

Adjustment with shims is the most economical and flexible procedure, since subsequent changes to the rotational resistance are also possible. Shims are available in different thicknesses depending on the screw diameter.

Requirements:

- Division of the inner or outer construction.
- The height of the raceway bed is 0,3 to 0,5 mm smaller on the side of the split adjacent construction. This gap is required to accommodate the shims.
- The split side of the adjacent construction should be fixed using a centring collar. This is the only way to guarantee the concentricity of the two raceways.

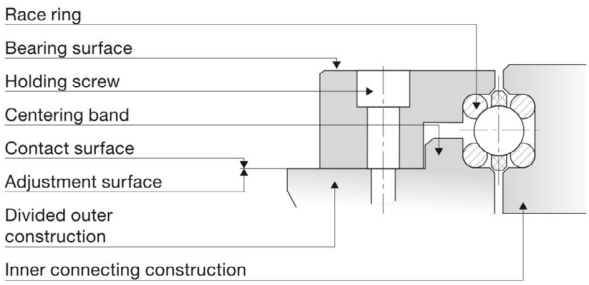

Installation and adjustment:
Before installation, both the raceways and the wire bed must be cleaned. The races are inserted in the adjacent construction. In order to hold the races in position during fitting, the race beds can be coated with grease. The joints of the opposing race rings in the same part are each fitted at an angle of approx. 180°. The split side of the adjacent construction is then brought into the intended position.

Then insert the cage segments with the balls and grease the bearing element (see 6.1 Lubrication and maintenance). Before the adjacent construction of the split side is closed, the shims must be distributed over the screw holes of the retaining screws. The thickness depends on the designed gap (see above).

After the screws (see 6.5 Screw connections) have been tightened and the rotary joint has been turned through 360° approx. 2 to 3 times, check the rotational resistance. If the measured value deviates more than 5 to 10 %, the thickness of all shims must be changed and the procedure repeated.

5.1.2 Adjustment by massive tuning

When using solid tuning, the tuning surface is brought to the required dimension by grinding over it. This method achieves the best accuracy since the interface between the split side of the adjacent construction is interlocking and no tension can build up.

Requirements:

- Division of the inner or outer construction.
- Surface grinding machine of suitable size.
- The height of the raceway bed on the side of the split adjacent construction is 0.1 mm greater. This allowance is required for the adjustment.
- The split side of the adjacent construction should be fixed using a centring collar. This determines the concentricity of the two raceways.

Installation and adjustment:
The cage segments with the balls are inserted and the bearing assembly is sealed with the second split side of the adjacent construction (shim ring). After the screws have been tightened as specified (see 6.5 Screw connections) and the bearing assembly has been turned through 360° approx. 2 or 3 times, the clearance between the inner and outer ring is measured using a dial gauge. The tuning ring is then dismantled again and the measured value determined plus 0.02 to 0.03 mm is ground off with the surface grinding machine.

To ensure that this surface remains parallel to the raceway support, a suitable mounting surface must be provided at the design stage.

After the grinding dust has been thoroughly removed, the ring is remounted as described above and the bearing is moved. Then check the rotational resistance. If this measured value deviates more than 5 to 10 %, the procedure must be repeated. Finally the bearing assembly is greased via the lubrication holes provided (see 6.1

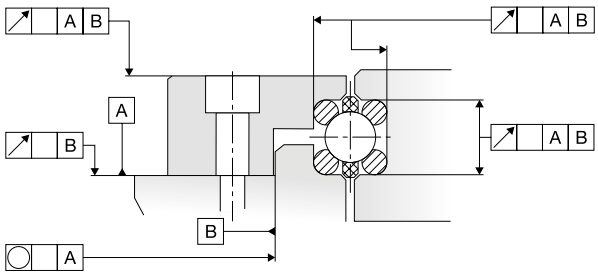

Lubrication and maintenance).

The bearings are suitable for continuous operation at temperatures between -10 °C and +70 °C - for short periods up to +120 °C.

Peripheral speeds of 10 m/s with grease lubrication and 12 m/s with oil lubrication can be achieved. The setting of the preload is an important prerequisite for a long service life of the bearing element. The preload ensures that all raceways are involved in load carrying and that the balls run optimally at their predetermined position. The preload is correctly adjusted when the rotational resistance without seal corresponds to the values in the diagram under point 6.

Note: It is advisable to adjust the preload, because even with optimum production there are tolerances which must be compensated.

5.2 Installation and adjustment of slim bearings
In the LSA, two running wires are combined into a single wire.

The special profile of the raceways maintains the 4-point principle. This makes installation just as easy as with conventional slim bearings.

The assembly is carried out in the following steps:
1. Clean components with a clean, lint-free cloth.
2. Grease the raceways (rear side).
3. Insert the race ring inner ring in the inner ring of the adjacent construction. Ensure that the raceway ends are separated by a gap.
4. Place the cage and outer race onto the inner race. Hold the raceway ends of the outer race together so that the ball cage cannot slip out.
5. Position the outer ring and push it in axially.
6. Replace the cover and screw it on.

Installation suggestion:

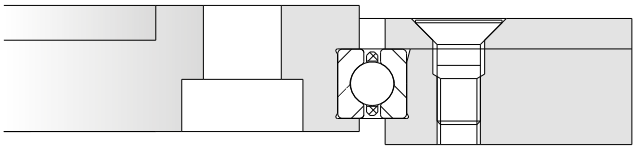

6 Installation and adjustment of bearing assemblies

Franke bearing assemblies are ready-to-install complete bearings. The specified or defined running accuracy, rotational resistance, rigidity and general characteristics depend both on the adjacent construction and on the correctness or completeness of the data transmitted. They must therefore be given particular attention.

6.1 Lubrication and maintenance
In order to keep friction low and to protect the bearing arrangement permanently against corrosion, sufficient lubrication should be ensured. All lubricants are subject to an ageing process that limits the operating life. The best resistance to ageing is achieved with fully synthetic lubricants. The grease SHELL GADUS S3 V 2200C for Franke bearing assemblies is used for initial greasing. The ageing resistance of this lubricant is approx. three years. This lubricant is also recommended for the use of bearing elements.

As an alternative, high-quality lithium soap greases based on synthetic oils or mineral oil or according to
DIN 51825-K2 K-40. Questions regarding the lubricant, such as miscibility, aggressiveness, extreme temperatures, disposal, areas of application, etc. must be clarified with the respective manufacturer of the lubricant.

6.2 Initial lubrication and relubrication
The amount of lubricant required by a wire-race bearing for lubrication is relatively small and is self-adjusting depending on the speed. If the quantity of lubricant is too large, the rolling action will cause increased temperatures which will limit or suspend the lubricity. The service life of the bearing is considerably reduced by the increased wear. The lubricant quantity depends on the calculated clearance inside the bearing assembly. The calculated volume must be filled with 20 to 30 % lubricant. For swivel bearings, 30 to 40 % is recommended.

Franke bearing assemblies are ready-to-install complete bearings. Bearing elements and slim bearings are treated with corrosion protection oil for transport and must be greased during assembly.

6.3 Relubrication and lubrication intervals

The lubricity decreases as a result of mechanical stress and signs of ageing. It is therefore necessary to supplement the existing lubricant quantity or to renew it completely (e.g. in case of heavy contamination). The bearing must be rotated during relubrication. Relubrication should be carried out at below operating temperature if possible.

6.3.2 Relubrication and lubrication intervals for bearing elements LV

The relubrication quantity is calculated as follows:

m = KKØ x H1 / 3 x X
H1 = Bearing ring height in mm
KKØ = Ball and cage diameter in mm
m = Relubrication quantity in g
X = Factor according to Table 1 in mm–1

Relubrication intervals:
An exact determination of the intervals is specific to the application and can therefore only be determined correctly by tests (for reference values see Table 1). To determine the factor X (Table 2), the time value read off is set in relation to the duty cycle of the application.

Note: For standard bearings, it is sufficient to fit a relubrication facility, since the lubricant is distributed evenly by the bearing movement. In the case of swivel bearings, at least three relubrication possibilities must be provided (3 x 120°).

Vu m/s	Intervall h
0 bis < 3	5000
3 bis < 5	1000
5 bis < 8	600
3 bis < 10	200

Table 1: Relubrication time limits

intervall	weekly	monthly	annually	2–3 years
X	0,002	0,003	0,004	0,005

Table 2: Relubrication intervalls

Circulating oil lubrication is basically possible and should be agreed with the respective manufacturer of the lubricant. Lubricant-free bearings are available for special applications (e.g. clean room or ultra high vacuum).

Calculation example:
Bearing assembly type LVA, KKØ 500 mm,
Peripheral speed 3 m/s
Duty cycle approx. 16 h/day
Relubrication period for 3 m/s is 1000 h (see Table 1) = 1000 (h)/16 (h/day) = 63 days ~ 3 months for 16 h/day duty cycle

Relubrication should be carried out quarterly. Accordingly, the factor X (Table 2) is rounded and amounts to 0.003. Dimension H1 is 42 mm (see www.franke-gmbh.de).

m = 500 mm x 42 / 3 mm-1 x 0.003 g = 21 g
The relubrication quantity is 21 g SHELL GADUS every three months. The shelf life of the lubricant is three years.

6.4 Lubrication and lubrication intervals for the gearing

Automatic gear lubrication is recommended. In the case of manual lubrication, the gear teeth and pinion must be adequately lubricated before commissioning. The lubrication interval depends on the design and the peripheral speed and must therefore be considered individually.

6.5 Screw connections

The number and diameter of the screws for mounting on the adjacent construction should always be checked. The distance X from retaining screw to retaining screw should not exceed 125 mm to avoid bridging. The fixing screws are tightened crosswise with a torque wrench in relation to the screw quality - according to the specifications in Table 3.

	Quality Nm	
	8.8	12.9
M 6	10	17
M 8	25	41
M 10	49	83
M 12	86	145
M 16	210	355

Table 3: Tightening torques

To compensate for settlement effects, the screws must be retightened to the specified tightening torque. This procedure should be carried out if possible when the screws are free of additional forces.

The checks must be carried out after approximately 100 and then every 600 operating hours. For special operating conditions (e.g. due to strong vibrations) this period can be considerably shorter.

6.6 Gearing

As standard Franke supplies a straight gearing without hardening (material 42CrMo4V) and special gearing on request. The material, the design and the quality can also be changed on request.

6.7 Tolerances and accuracies

All tolerances and accuracies are stated on the respective catalogue pages. The greatest possible accuracies are achieved if the design of the enclosing parts is such that all diameters and surfaces in relation to each other can be machined in one clamping. The running accuracies in the catalogue are average values and can be further improved by limiting the tolerances. The tolerance specification T = IT6 or T = IT7 refers to the diameter-dependent basic tolerances according to DIN ISO 286.

Nominal dimension range mm		Basic tolerances µm	
starting from ...	up to	IT6	IT7
80...	120	22	35
120...	180	25	40
180...	250	29	46
250...	315	32	52
315...	400	36	57
400...	500	40	63
500...	630	44	70
630...	800	50	80
800...	1000	56	90
1000...	1250	66	105
1250...	1600	78	125

Table 4: Tolerance specifications DIN ISO 286 T1 (11.90)

7 Rotary tables and direct drives

Franke rotary tables are highly resilient and particularly suitable for assembly, measuring and testing tasks. All rotary tables have a compact aluminum housing with integrated Franke components. A worm gear guarantees high accuracy even under continuous load. The rotary tables are extremely tilt resistant at a low tare weight.

Bearing assemblies with direct drive are suitable for applications where high performance and low space requirements are important criteria. The integration of the drive into the bearing housing means that wear-prone components for transmitting drive power such as toothed belts, shafts or chains are no longer needed. This reduces the required drive energy and also benefits more precise positioning.

7.1 Load capacity

The recommended safety for Franke turntables is
Sst ≥ 3 for simple load ratios and Sst ≥ 6 for dynamically changing load and lever ratios. Franke will calculate the load and service life if required.

7.2 Temperature range

The rotary tables can be operated at an operating temperature of -10 °C to +80 °C.Extended temperature ranges are possible on request.

7.3 Lubrication

In general, all standard rotary tables are provided ex works with long-term lubrication with the wire-race bearing grease ISOFLEX TOPAS NCA52. It is recommended to relubricate Franke rotary tables - depending on the application - every six months to annually.

	Lubrication quantity g		
Lubrication point	left	front	right
LTA100		1	1
LTA200		1	1
LTB125	2		
LTB175		3	
LTB265		3	
LTB400		4	
LTD100			
LTD205			
LTD320			
LTD385			

7.4 Options

- One or two integrated inductive proximity switches
- Freely positionable trip cams
- Mounting kits for motors according to customer requirements
- Motorization depending on the application with stepper or servo motors
- Encoder mounting on the second shaft end of the worm shaft
- Complete automation solutions

For all technical information, please also refer to our assembly and maintenance instructions for the respective products.

Technical Information on Wire Race Bearings
We reserve the right for errors and alterations.

Updated: March 2020

© Franke GmbH
Obere Bahnstraße 64
73431 Aalen, Germany
info@franke-gmbh.de

www.franke-gmbh.de

www.franke-gmbh.com

The content is current as of the date of printing.
Subject to changes and errors.

Franke GmbH
Obere Bahnstraße 64
73431 Aalen
Germany
Tel. +49 7361 920-0
info@franke-gmbh.de